HORIZON
FITNESS

725E

PEP511-1US

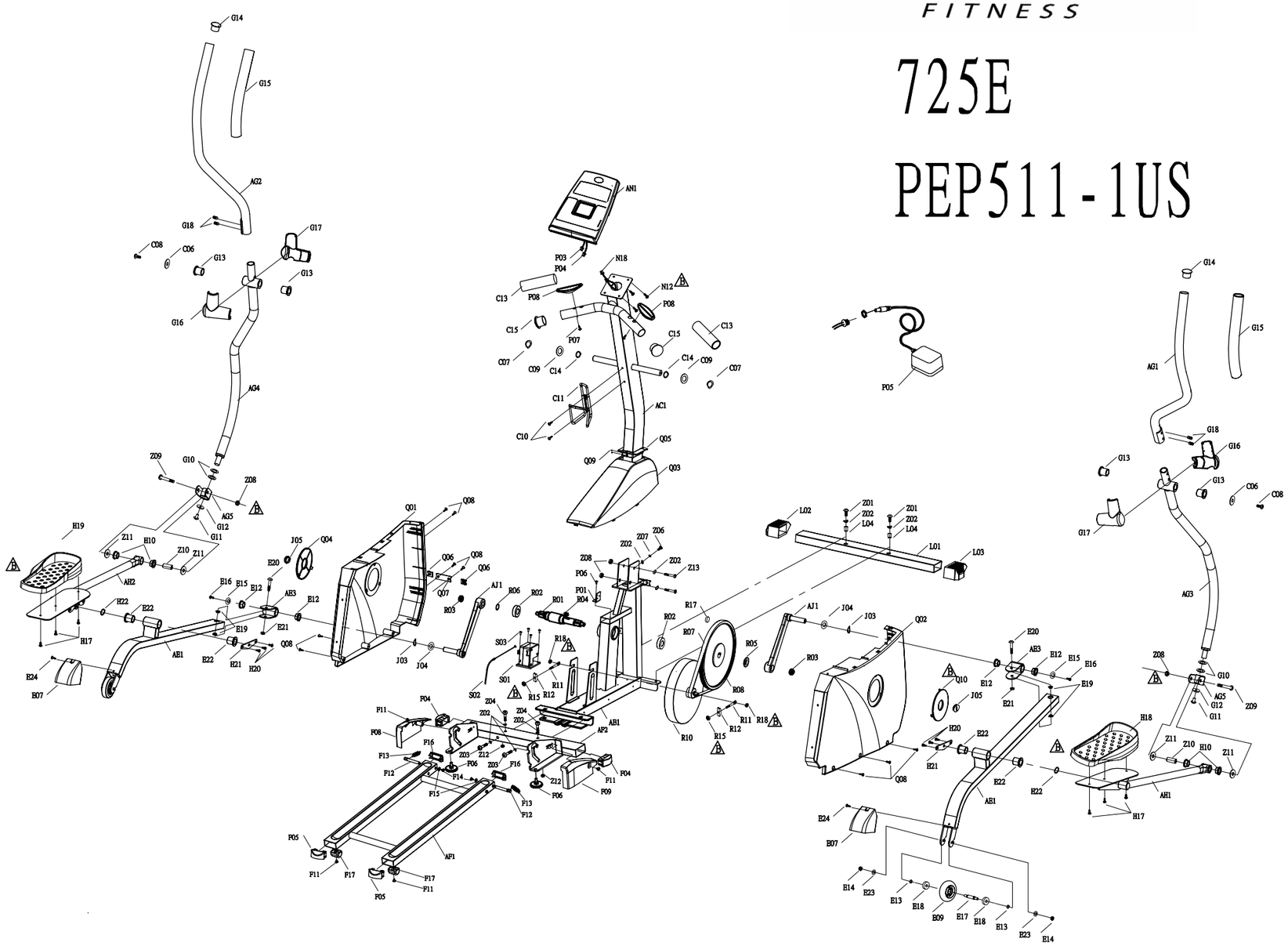

EP511-A04B

2008-05-19