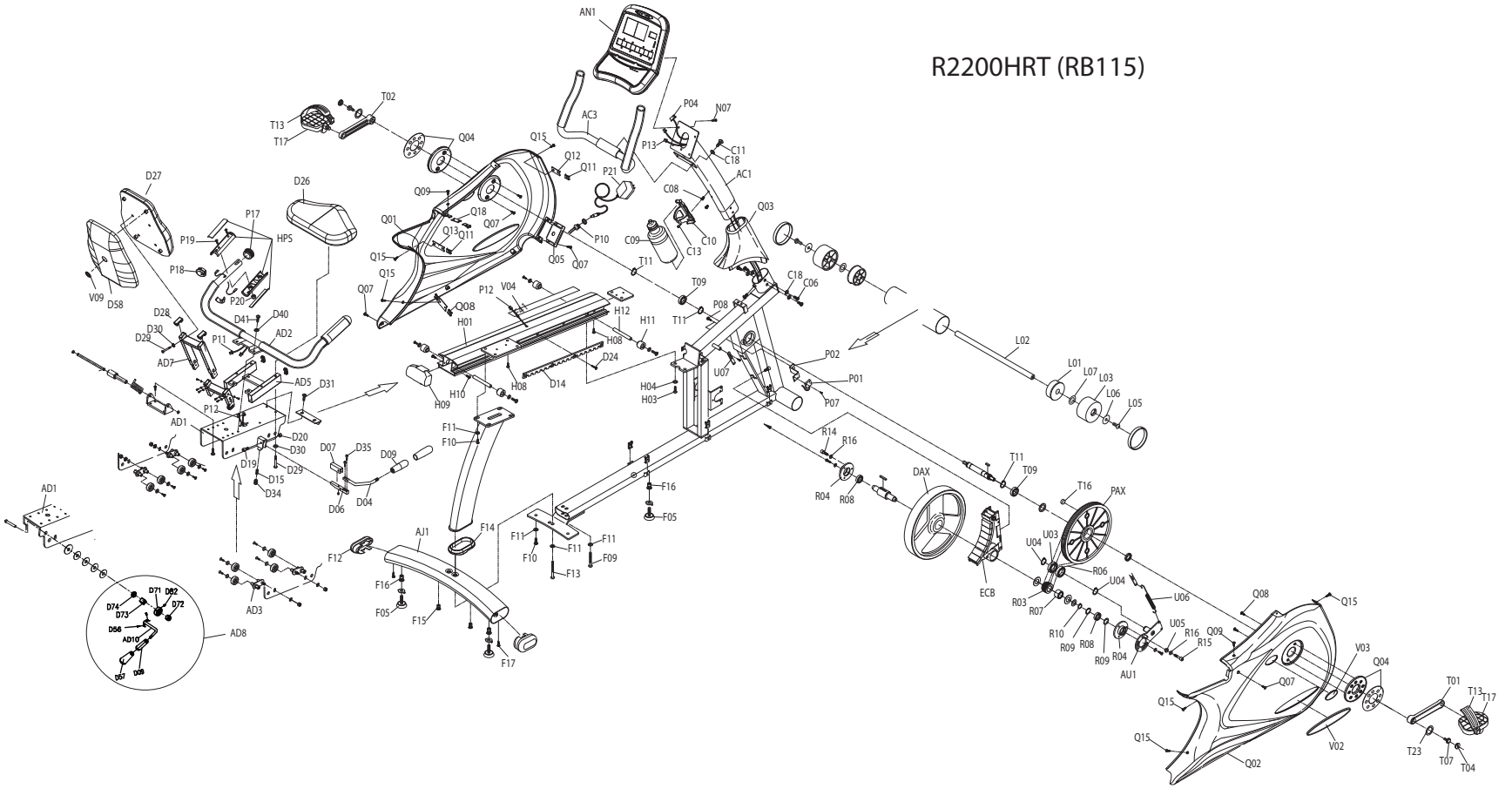R2200HRT (RB115)