DRAWING NO	RB135-1US-F		
PART NAME	Explosive Drawing		
PART NO	VRB0097-00	REV	D
APPROVE	YangWQ	DATE	2014-01-24

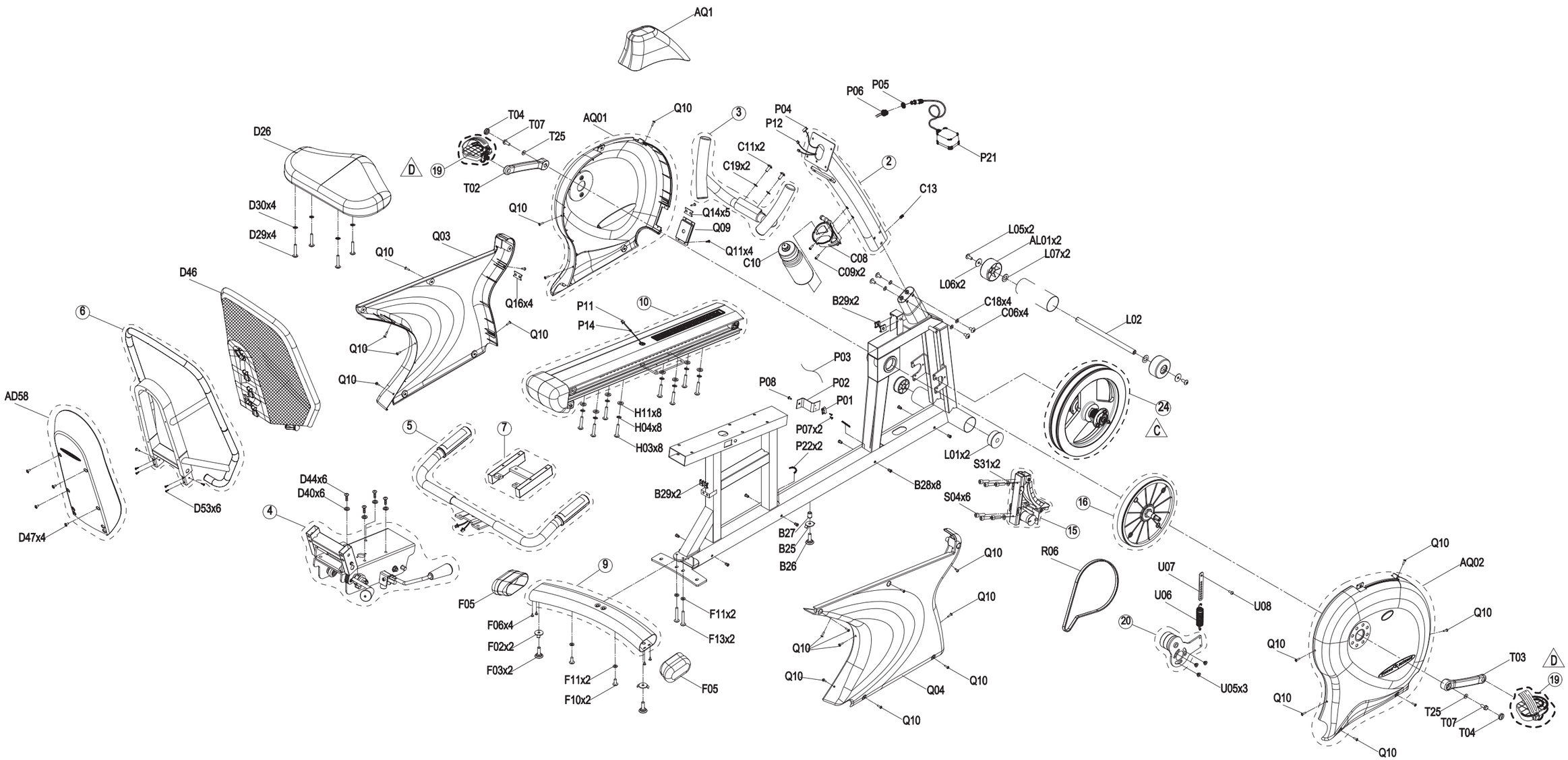

DRAWING NO	RB135-A16		
PART NAME	Console Mast Set		
PART NO	1000112303	REV	A
APPROVE		DATE	2010.12.24

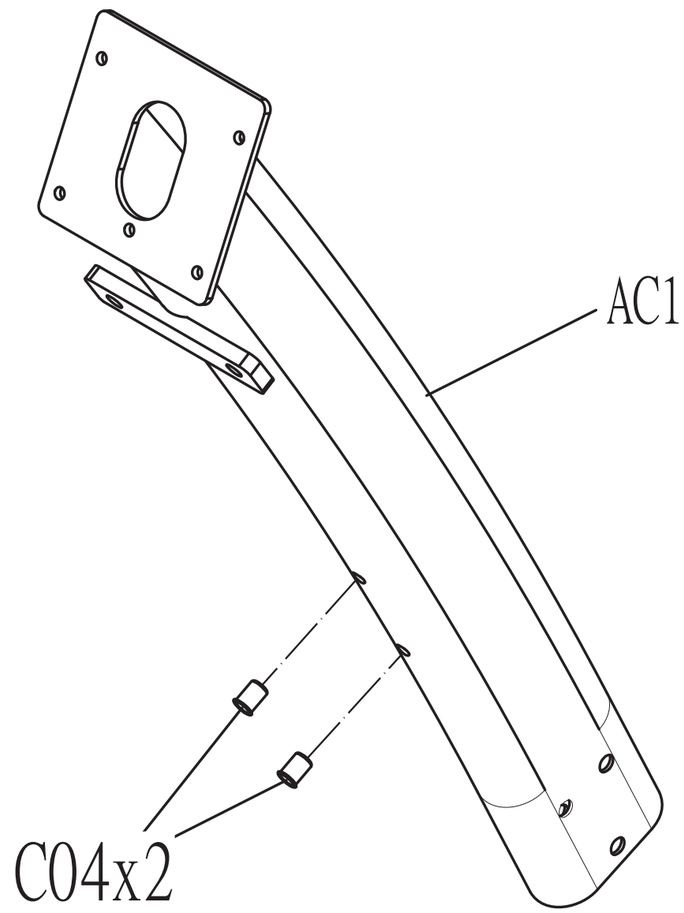

DRAWING NO	RB135-A17		
PART NAME	Front Handle Set		
PART NO	1000112305	REV	A
APPROVE		DATE	2010.12.24

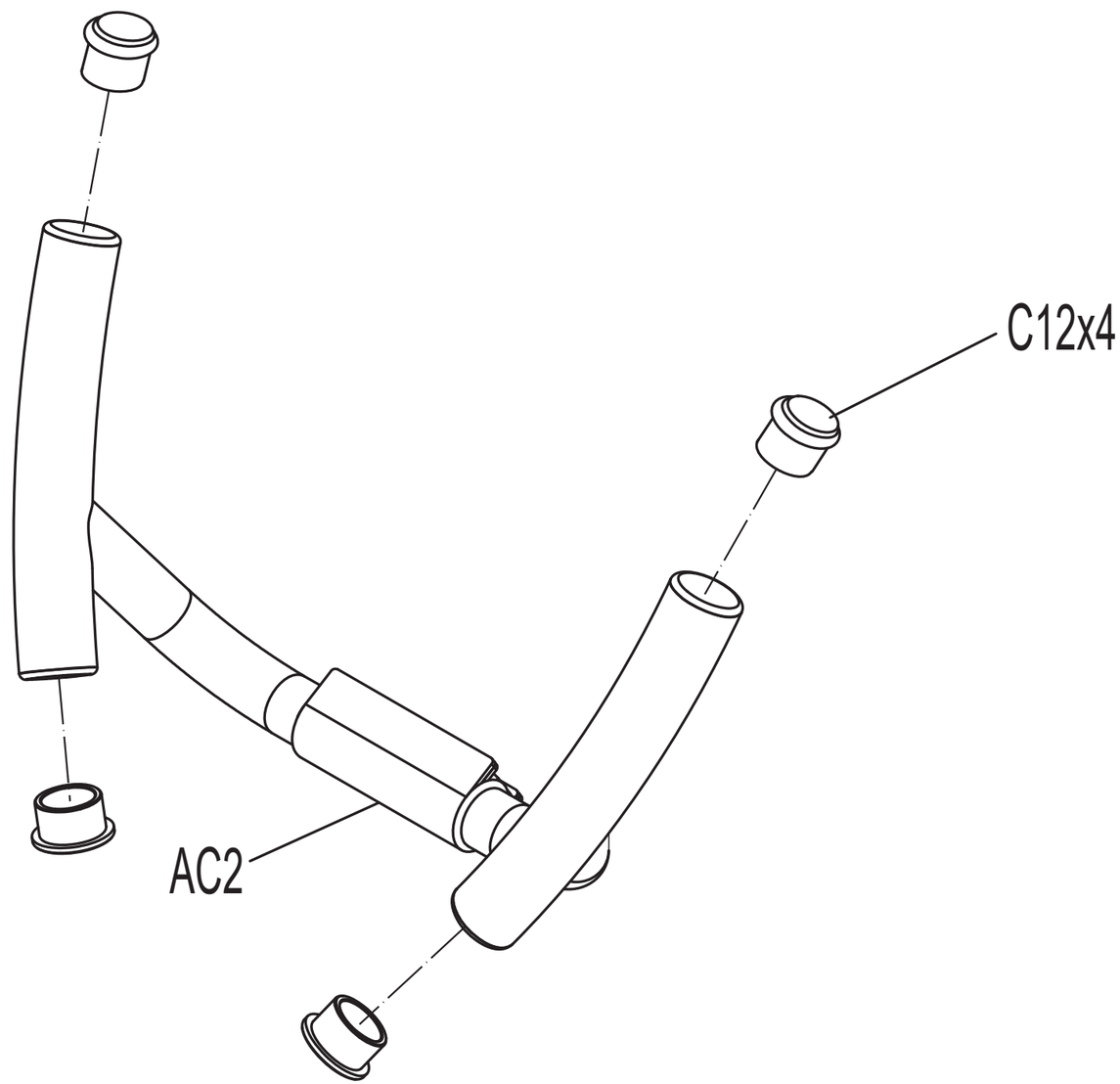

DRAWING NO	RB135-A18		
PART NAME	Seating Washer Slide Carriage Set		
PART NO	1000112307	REV	A
APPROVE	yangweiqian	DATE	2014.01.13

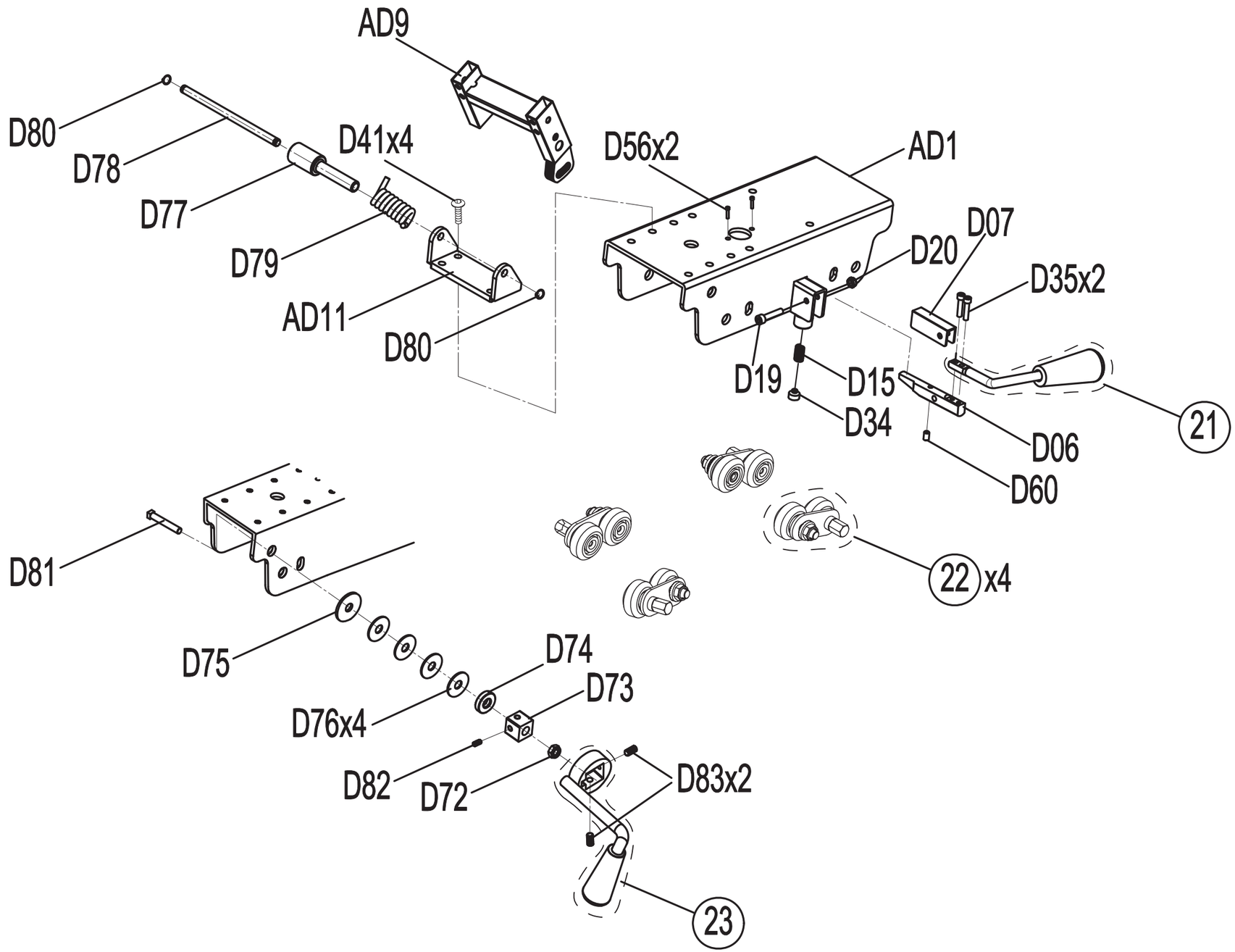

DRAWING NO	RB135-A19		
PART NAME	Seating Washer Handle Set		
PART NO	1000112309	REV	A
APPROVE		DATE	2010.12.24

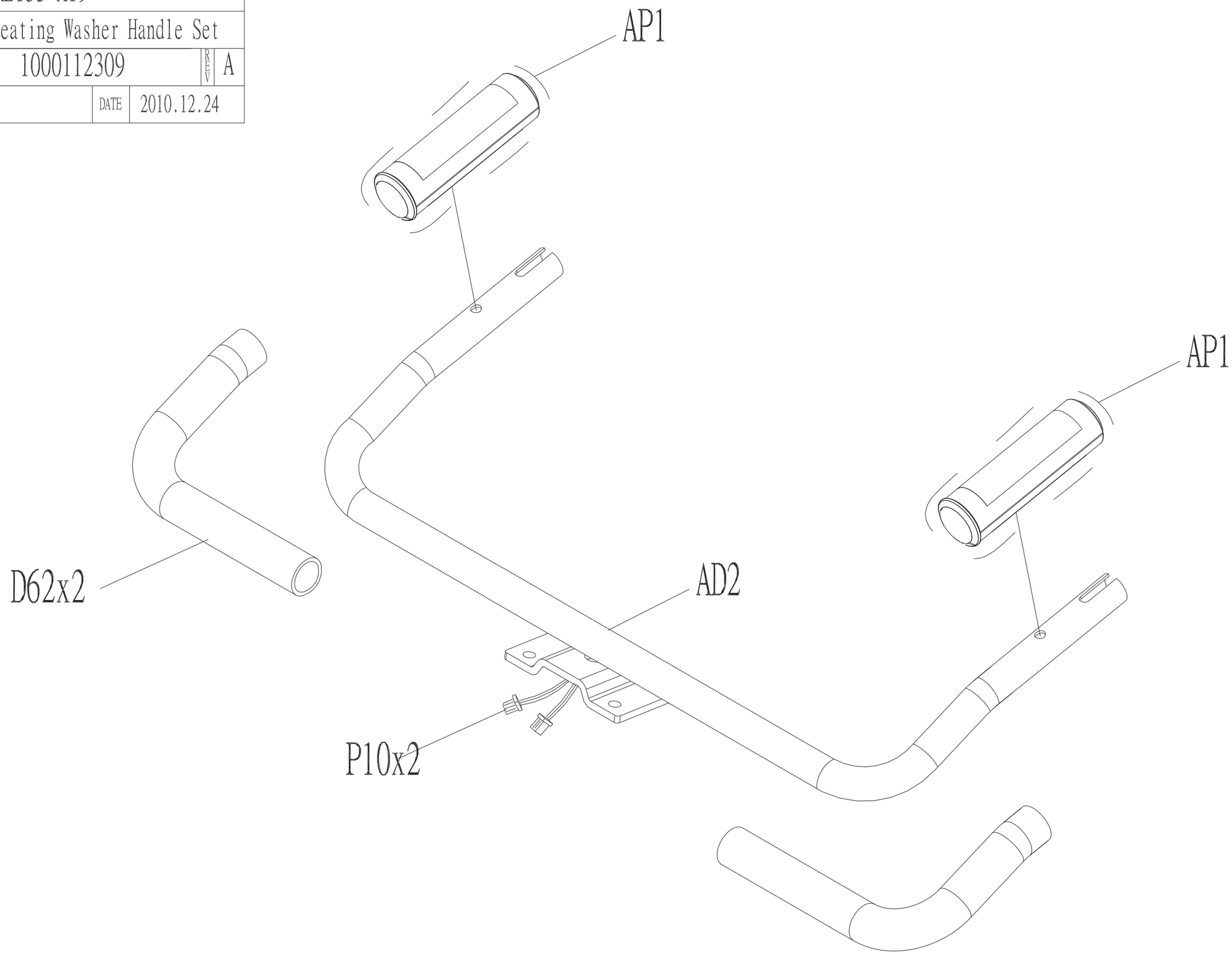

DRAWING NO	RB135-A20		
PART NAME	Back Pad Rack Set		
PART NO	1000112310	REV	A
APPROVE		DATE	2010.12.24

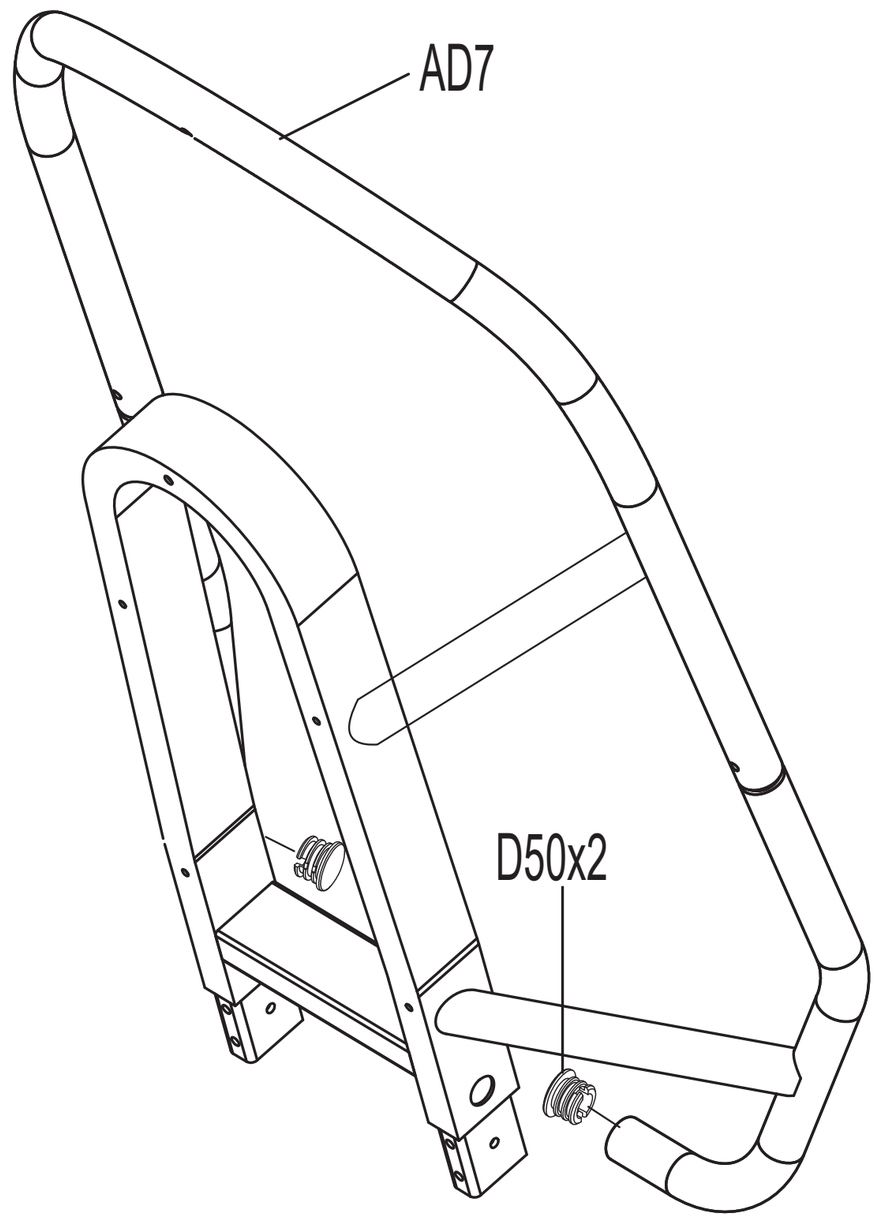

DRAWING NO	RB135-A21		
PART NAME	Back Pad Rear Protect Cover Set		
PART NO	1000112311	REV	A
APPROVE		DATE	2010.12.24

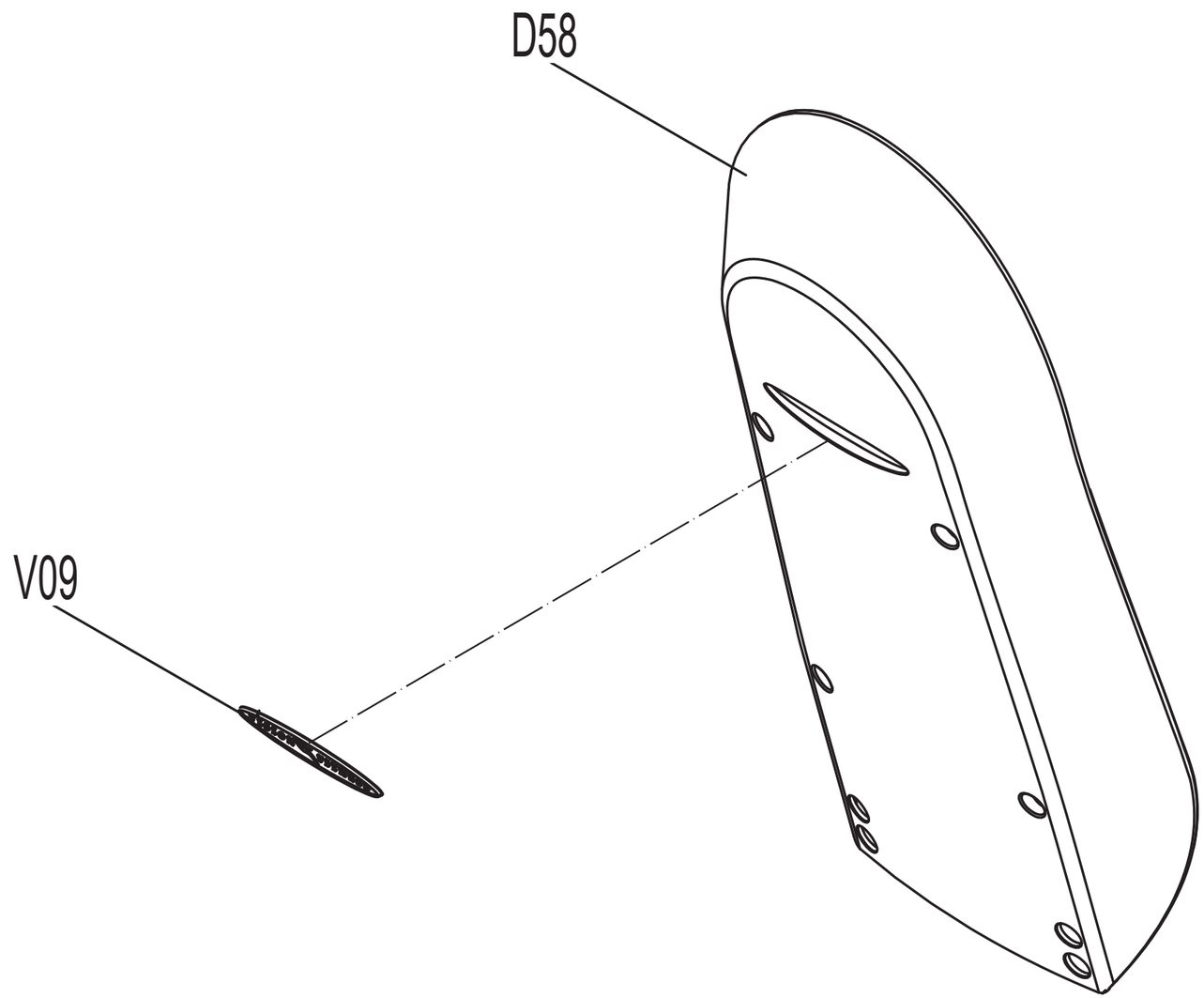

DRAWING NO	RB135-A22		
PART NAME	Seating Washer Rack Set		
PART NO	1000112313	REV	A
APPROVE		DATE	2010.12.24

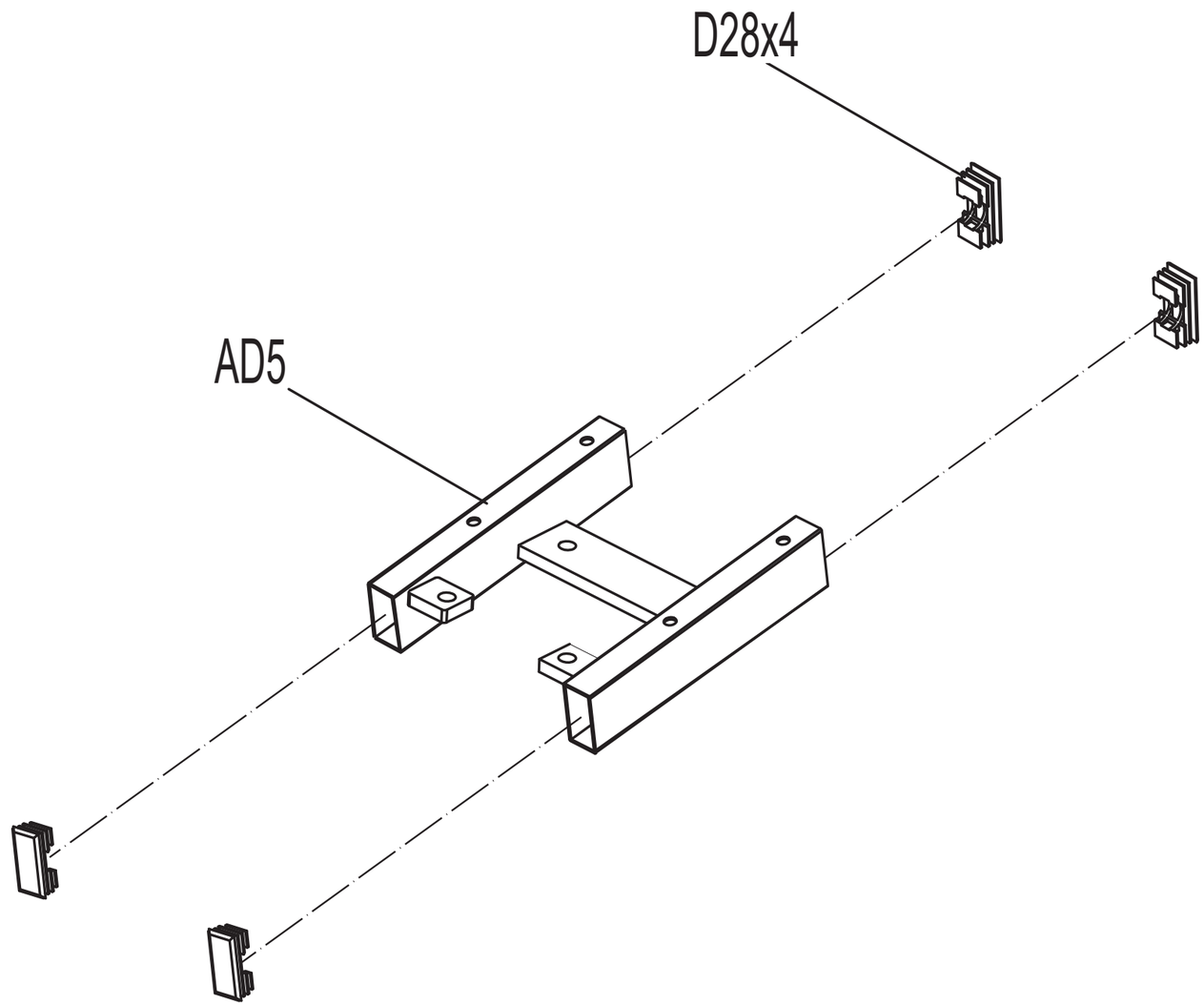

DRAWING NO	RB135-A24		
PART NAME	Seating Washer Rack Set		
PART NO	1000112315	REV	A
APPROVE		DATE	2010.12.24

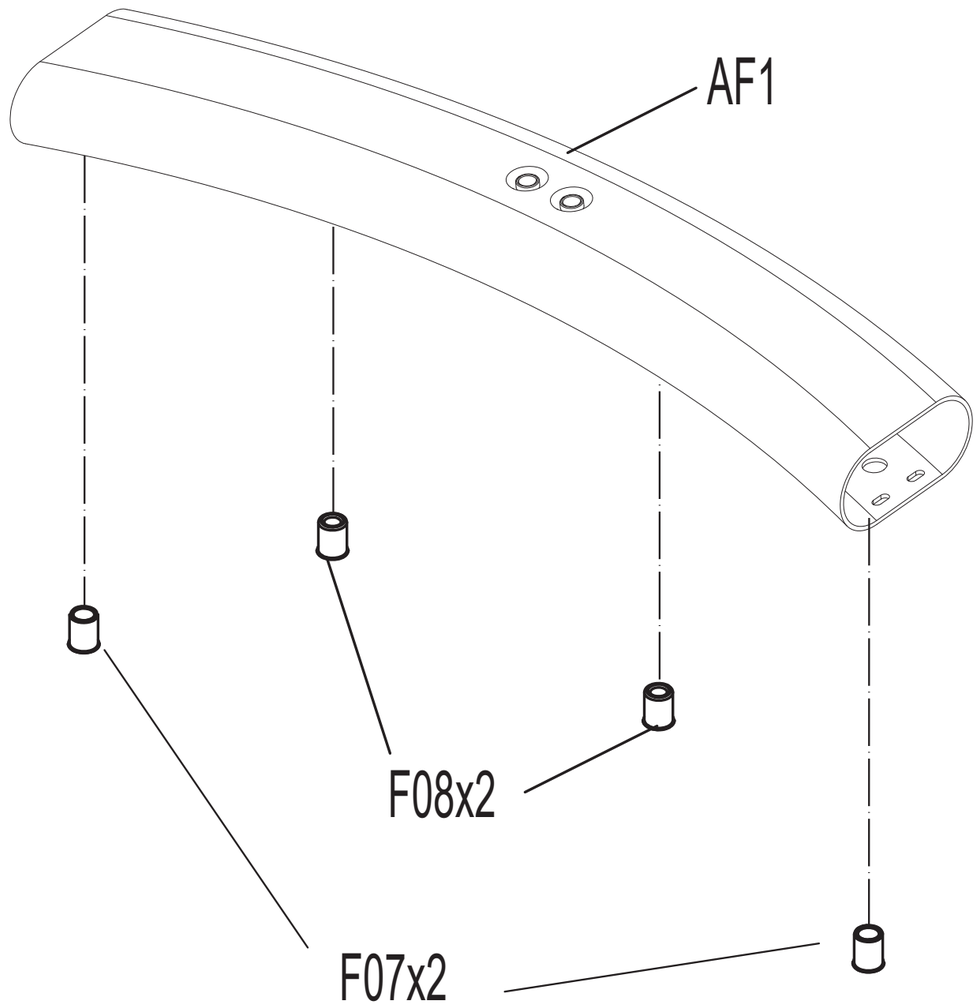

DRAWING NO	RB135-A25		
PART NAME	Guide Rail Set		
PART NO	1000112317	REV	A
APPROVE		DATE	2010.12.24

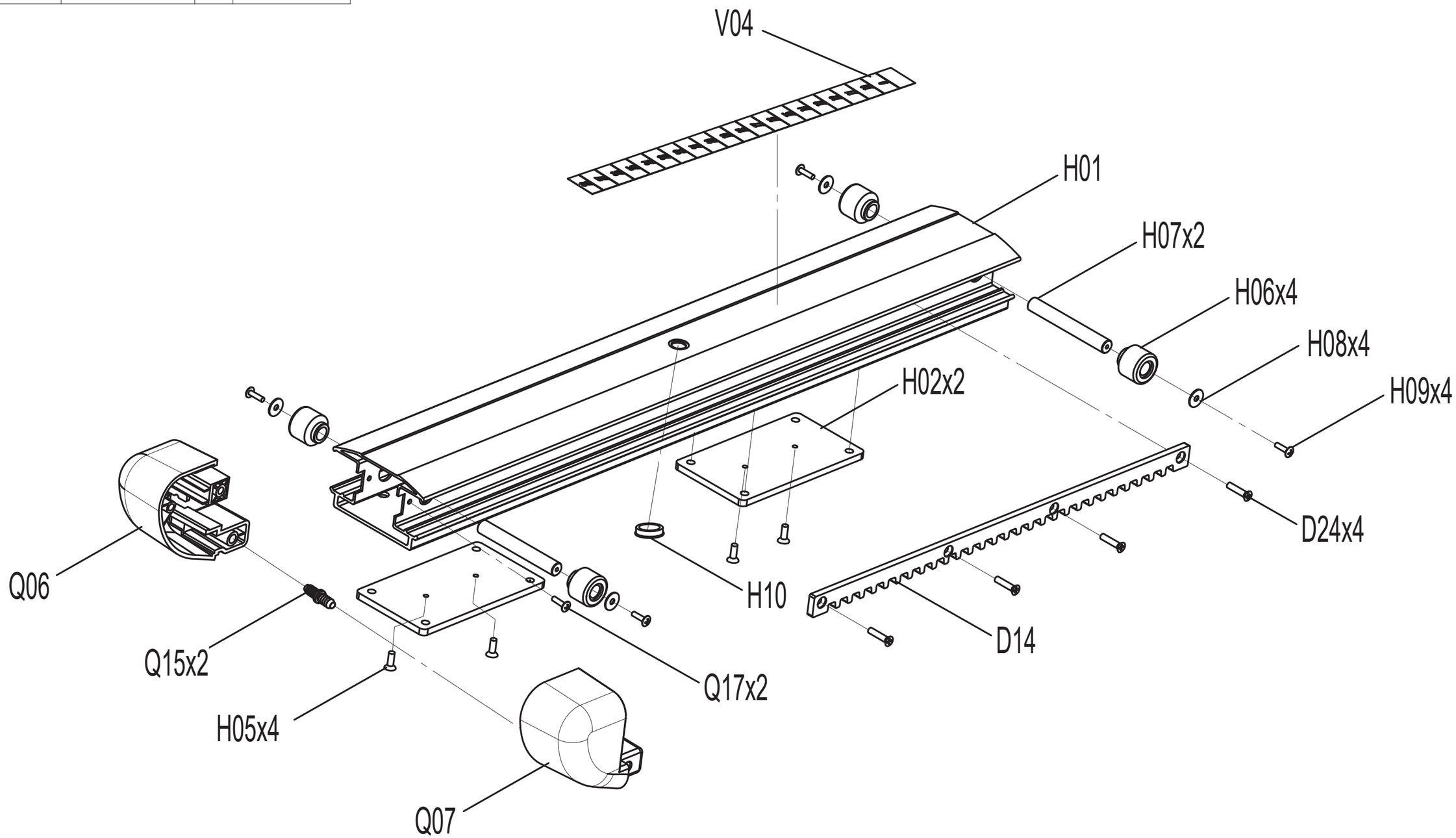

DRAWING NO	RB135-A29		
PART NAME	Protect Cover;L		
PART NO	1000112321	REV	A
APPROVE		DATE	2010.12.24

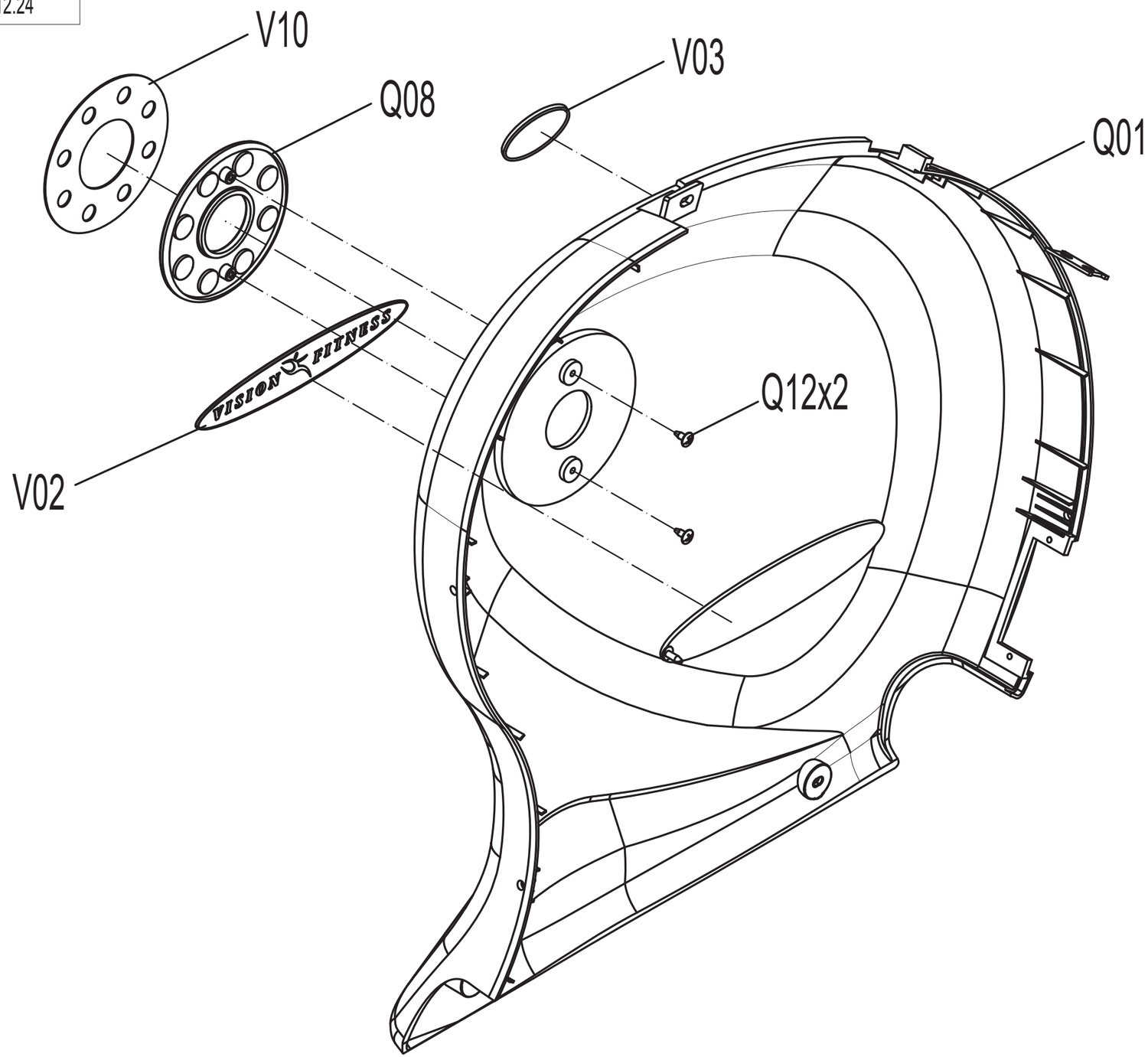

DRAWING NO	RB135-A30		
PART NAME	Seating Washer Rack Set		
PART NO	1000112322	REV	A
APPROVE		DATE	2010.12.24

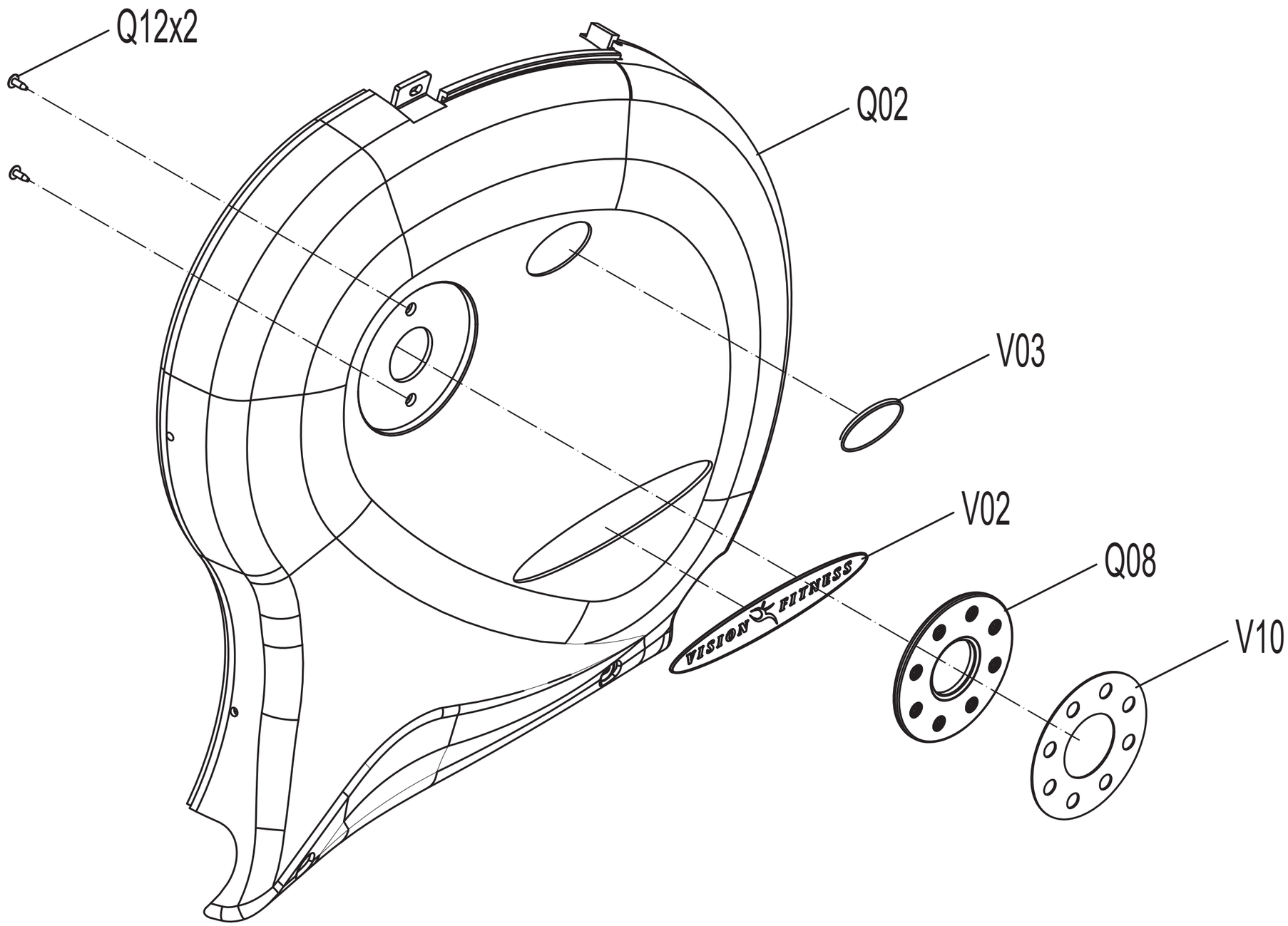

DRAWING NO	RB135-A31		
PART NAME	Flywheel Set		
PART NO	1000112324	REV	A
APPROVE		DATE	2010.12.24

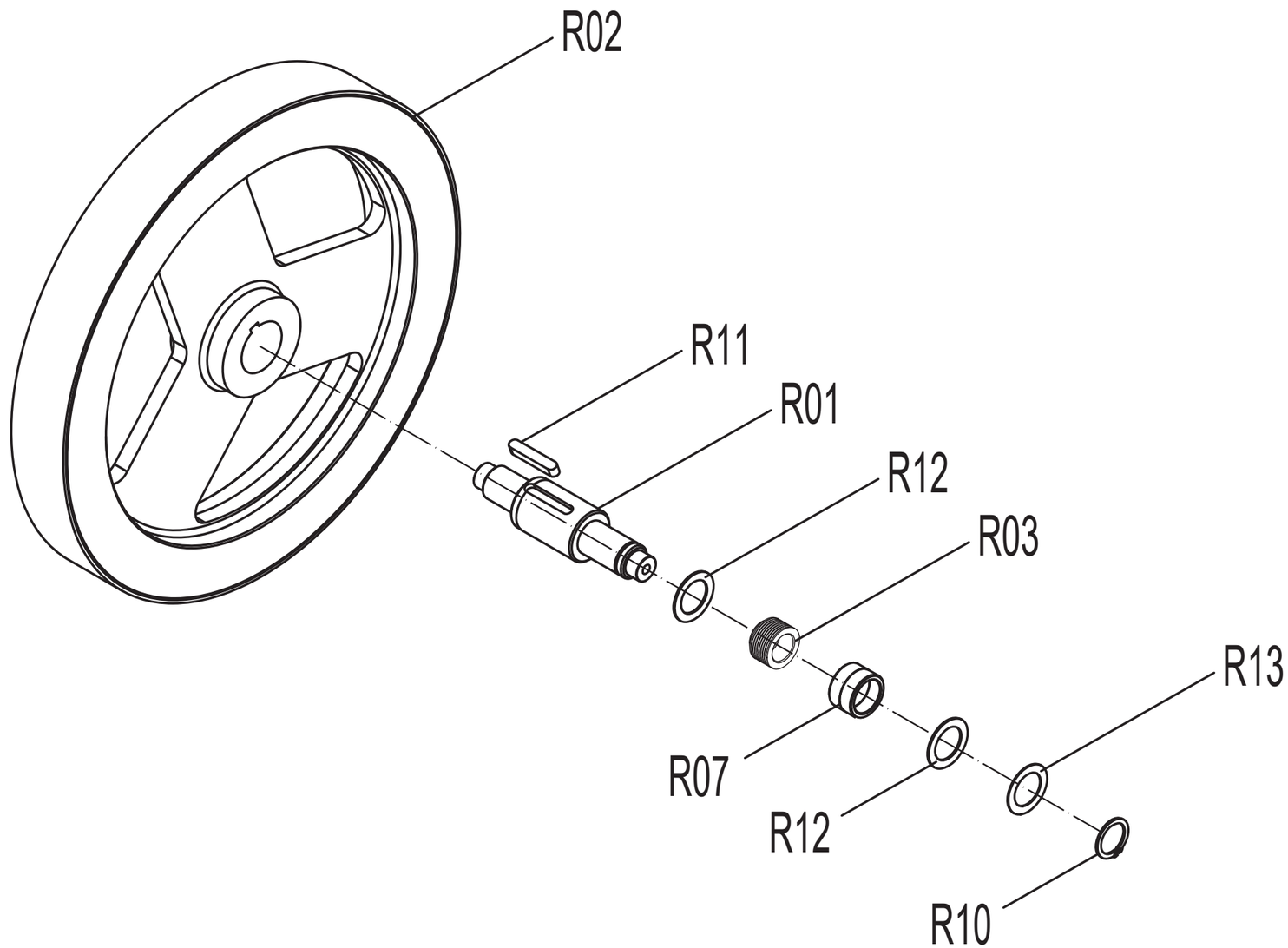

DRAWING NO	RB135-A32		
PART NAME	Magnetism Charge Set		
PART NO	1000112325	REV	A
APPROVE		DATE	2011.01.26

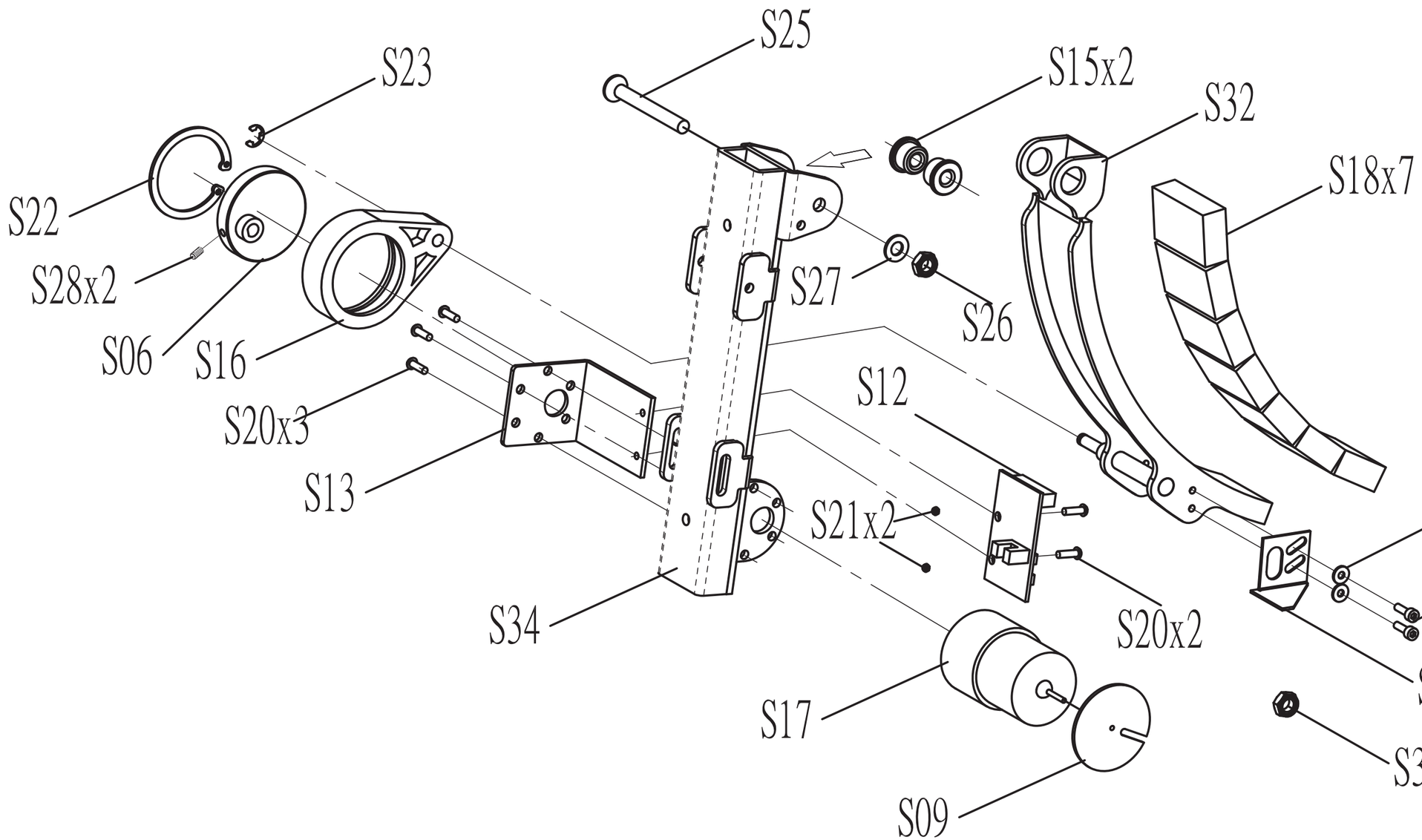

DRAWING NO	RB135-A33		
PART NAME	Pedal Principal Axis Set		
PART NO	1000112327	REV	A
APPROVE		DATE	2010.12.24

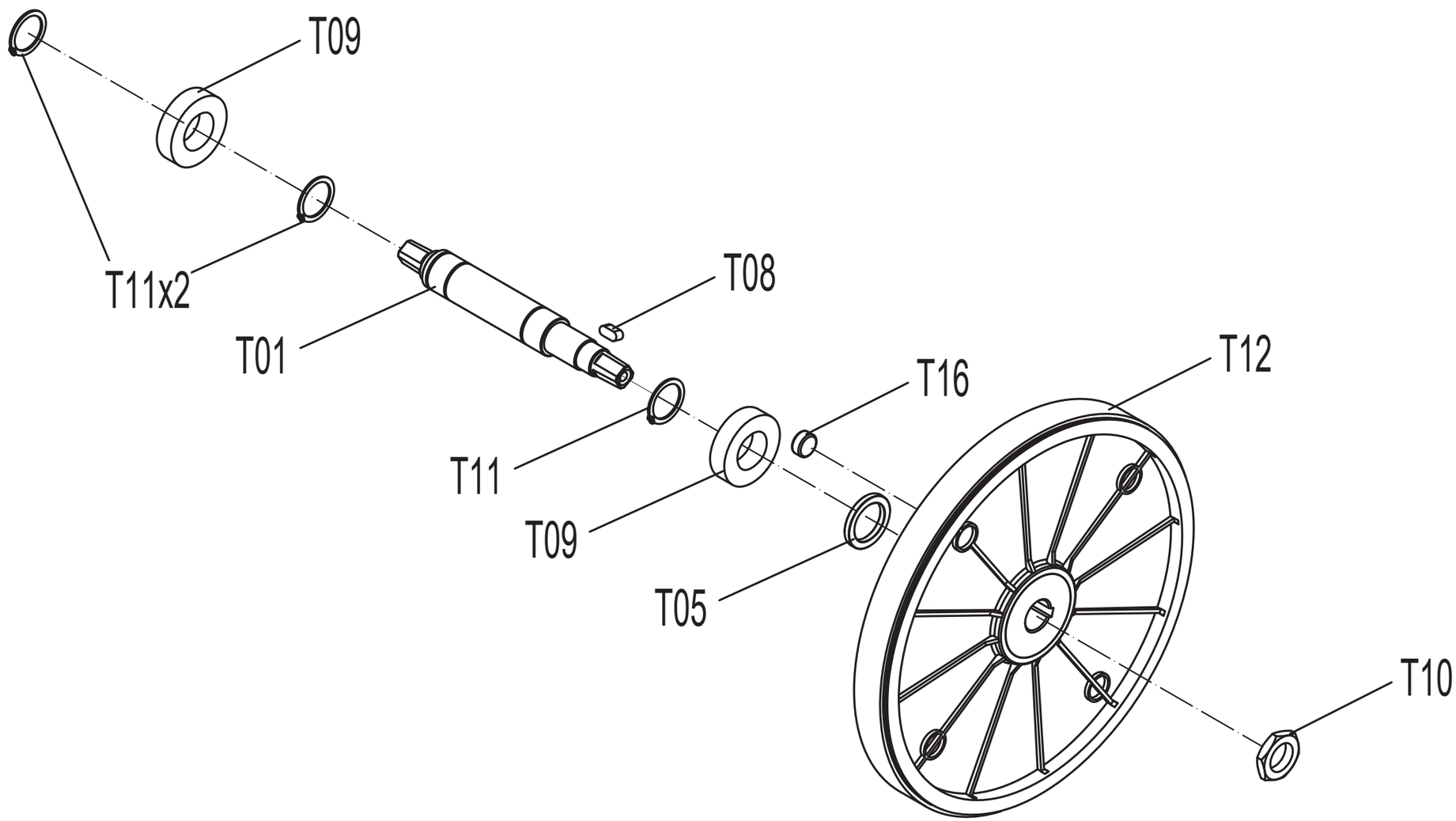

DRAWING NO	RB135-A37		
PART NAME	Pressure Wheel Prop Piece Set		
PART NO	1000112331	REV	A
APPROVE		DATE	2010.12.24

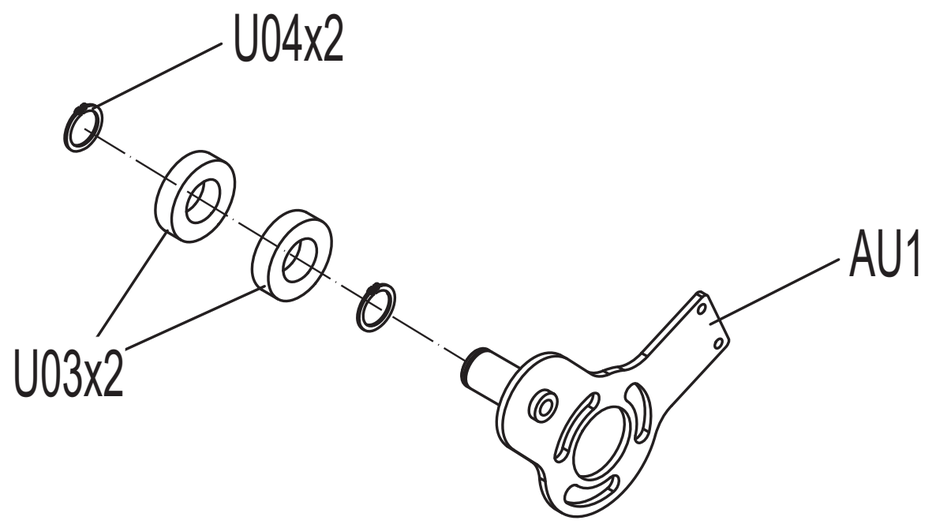

DRAWING NO	RB135-A38		
PART NAME	Adjustable Handlebar Set		
PART NO	1000213102	REV	A
APPROVE		DATE	2010.12.24

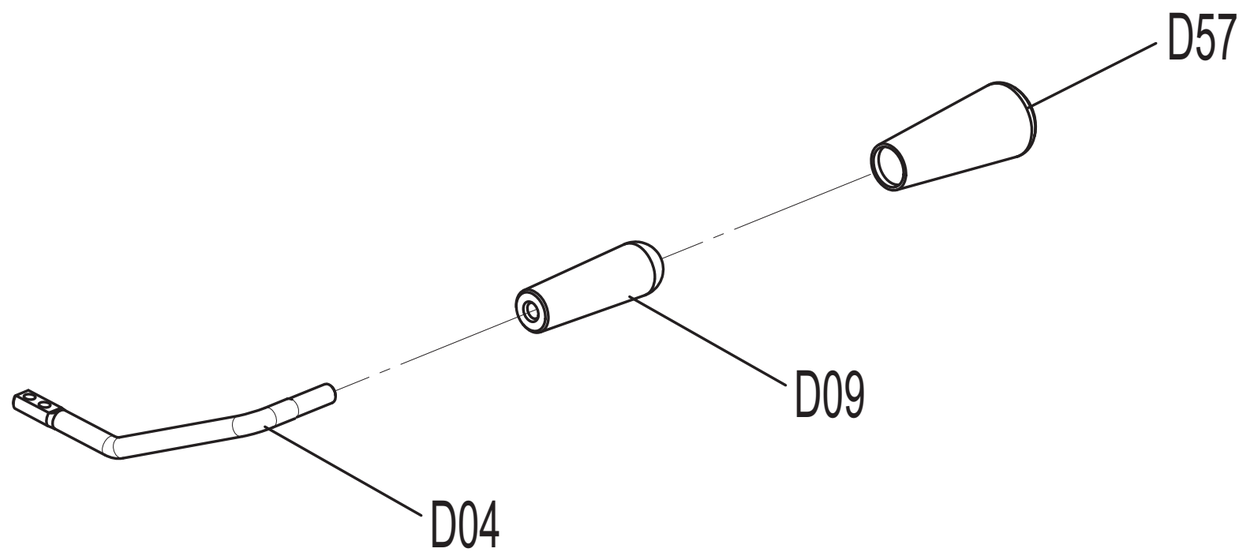

DRAWING NO	RB135-A39		
PART NAME	Roller Axle Set		
PART NO	1000213103	REV	B
APPROVE	yangweiqian	DATE	2014.01.13

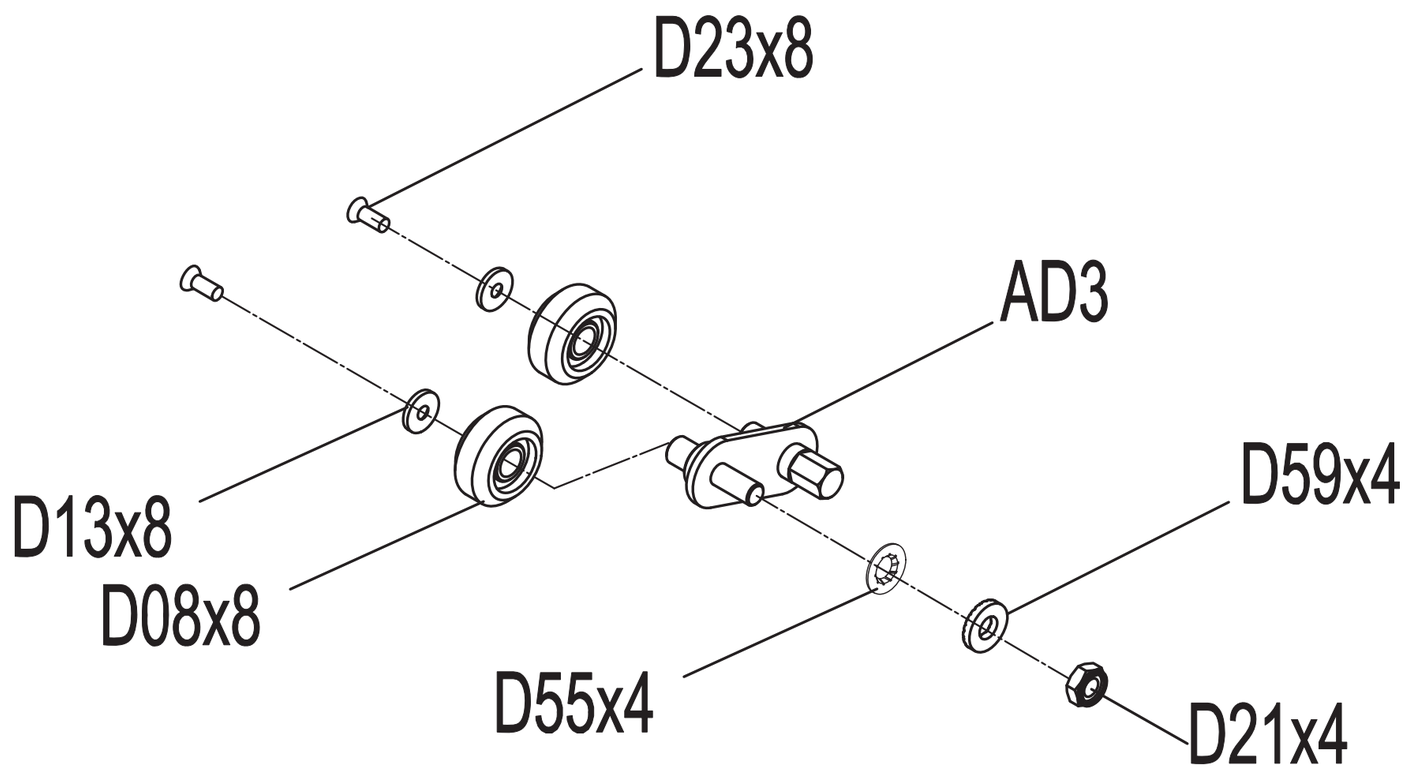

DRAWING NO	RB135-A40		
PART NAME	Handlebar Set		
PART NO	1000213104	REV	A
APPROVE		DATE	2010.12.24

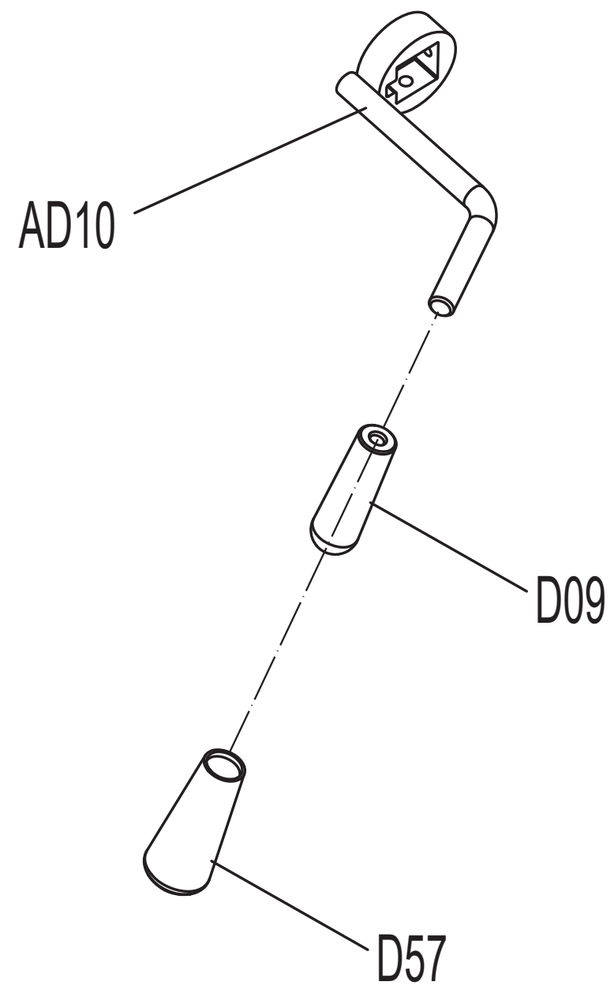

DRAWING NO	RB135-A41		
PART NAME	Sensor Handle Set		
PART NO	1000213105	REV	A
APPROVE	yangweiqian	DATE	2014.01.13

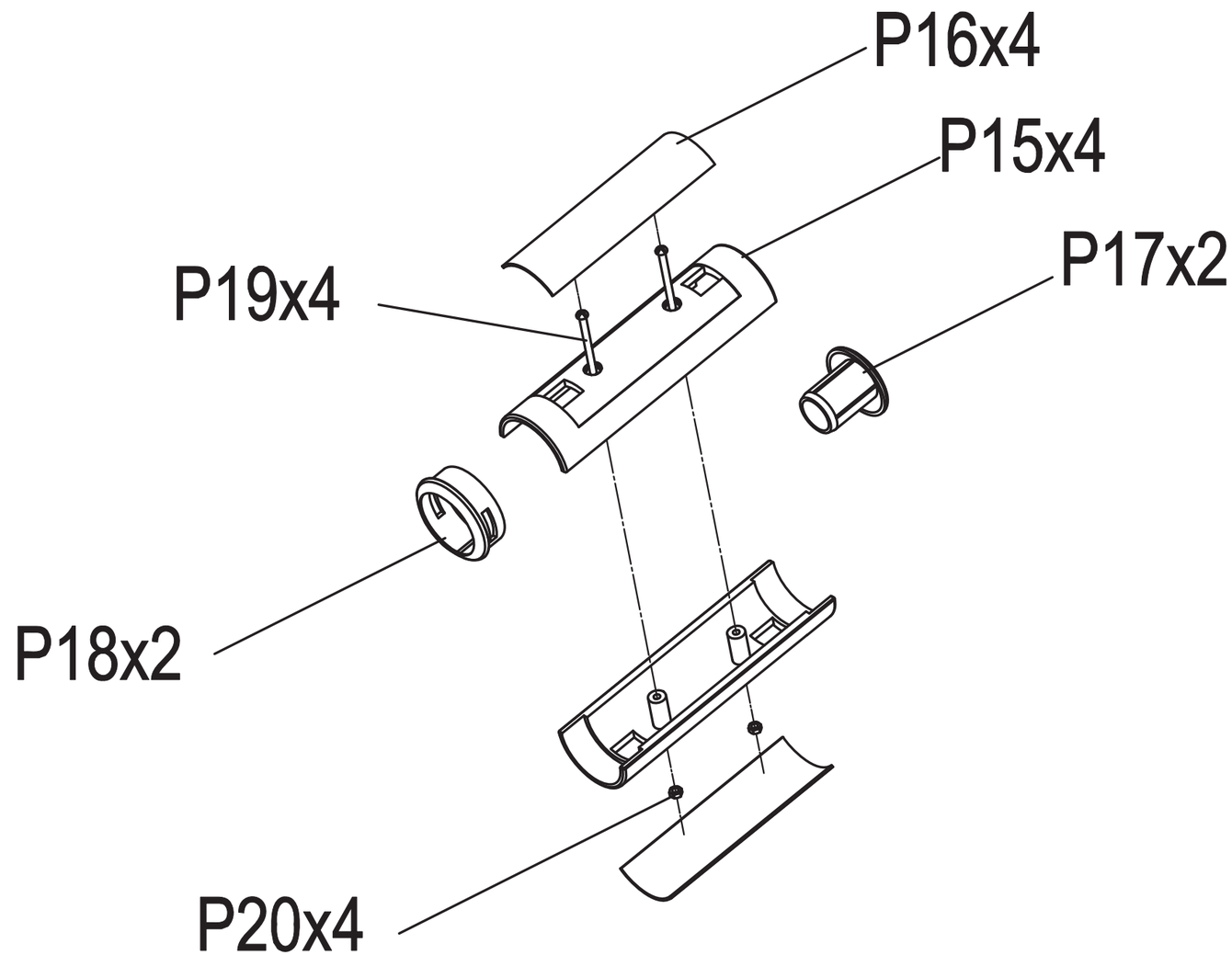

DRAWING NO	CB157-A15		
PART NAME	Foot Pedal Set		
PART NO	1000228989	REV	A
APPROVE		DATE	

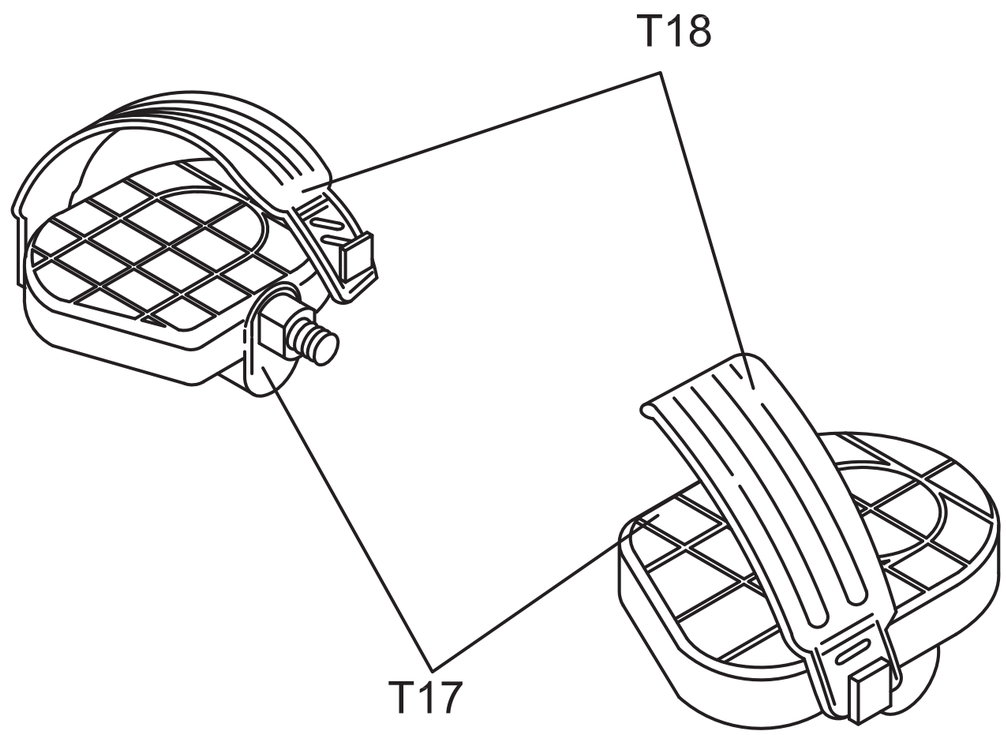
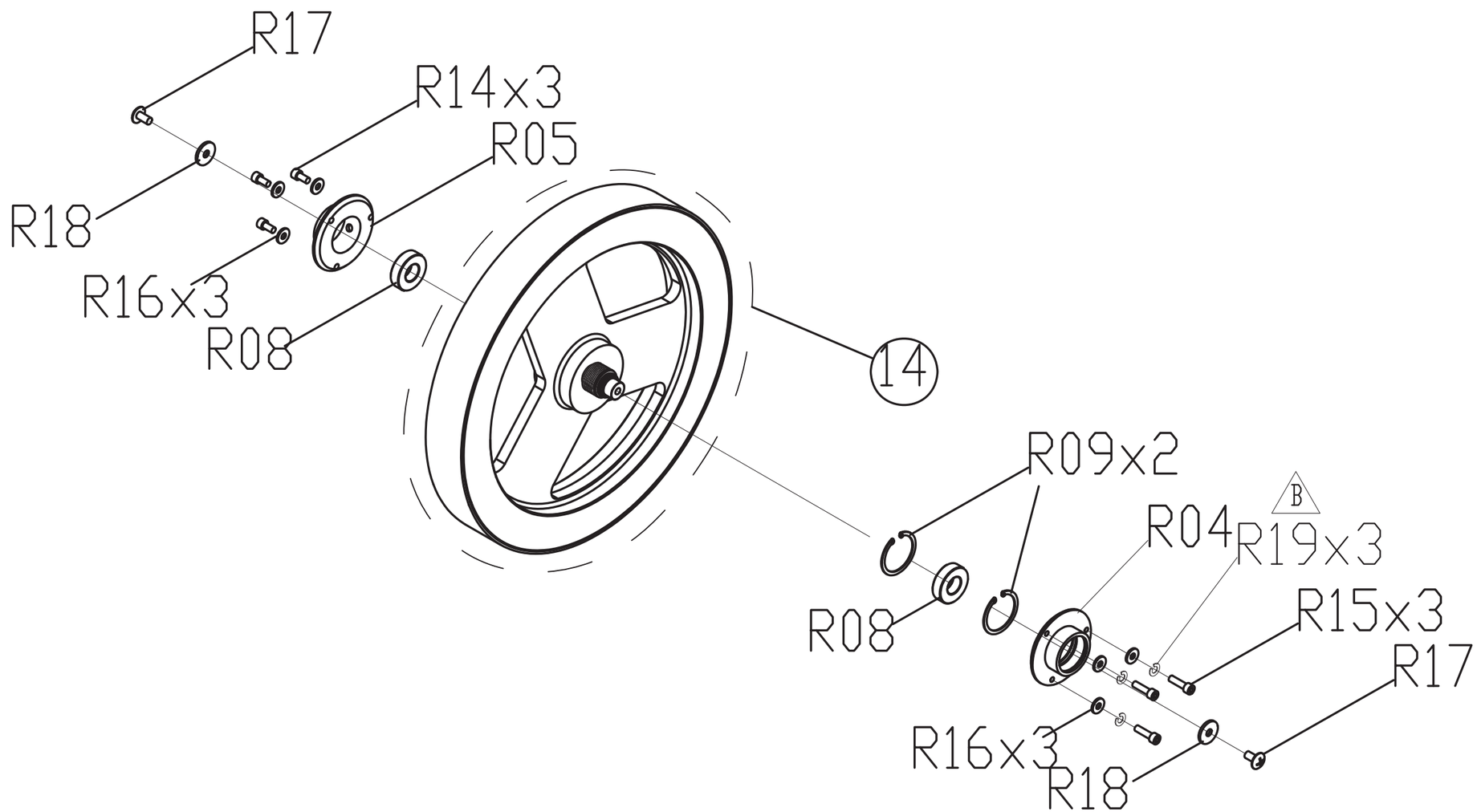
DRAWING NO	RB135-A42		
PART NAME	Flywheel set;Add bearing set		
PART NO	1000304052	REV	B
APPROVE		DATE	2013-05-28