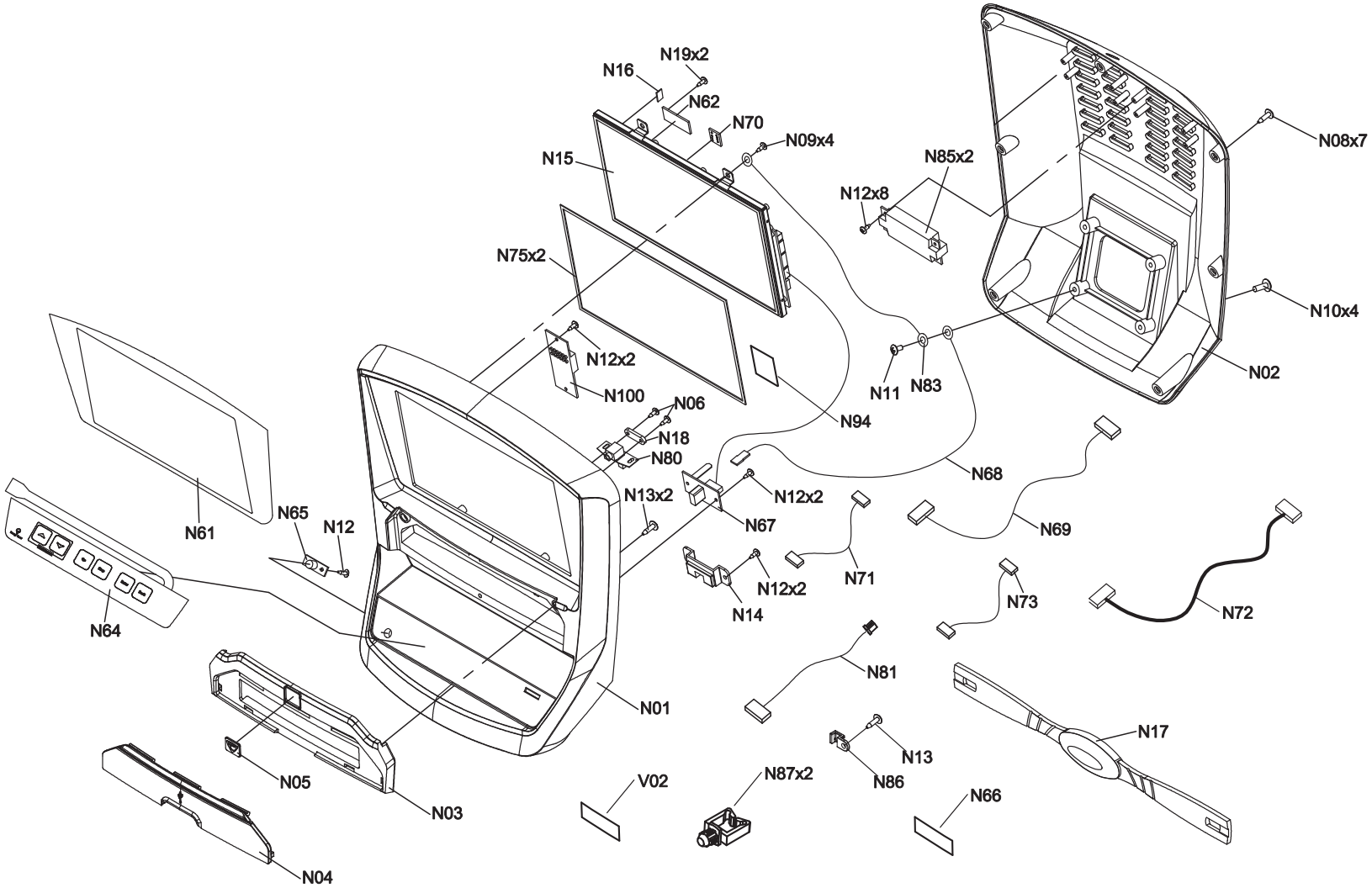DRAWING NO	EP588-AN1		
PART NAME	Console Set		
PART NO	1000329341	REV	A
APPROVE		DATE	2014.05.19