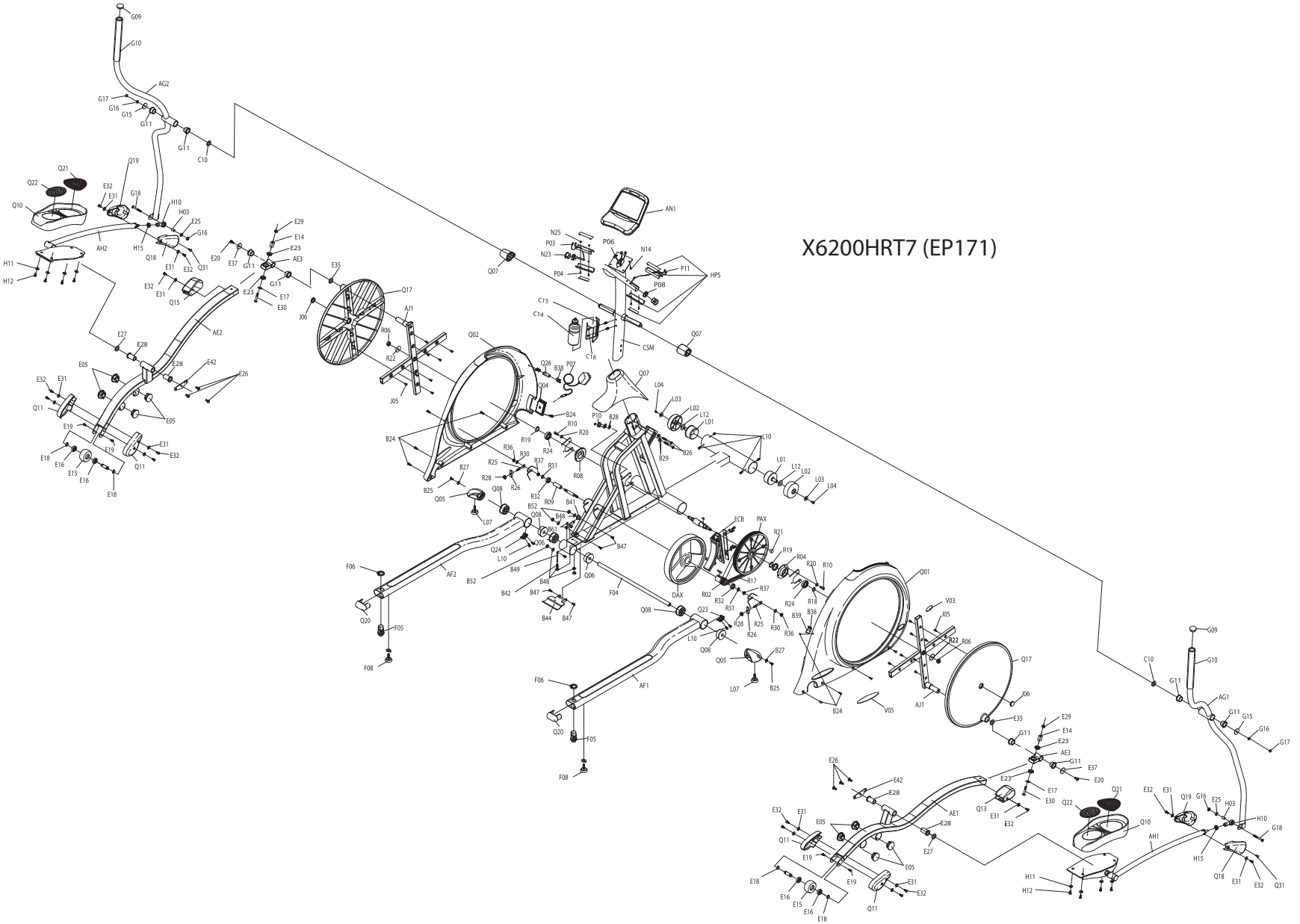X6200HRT7 (EP171)