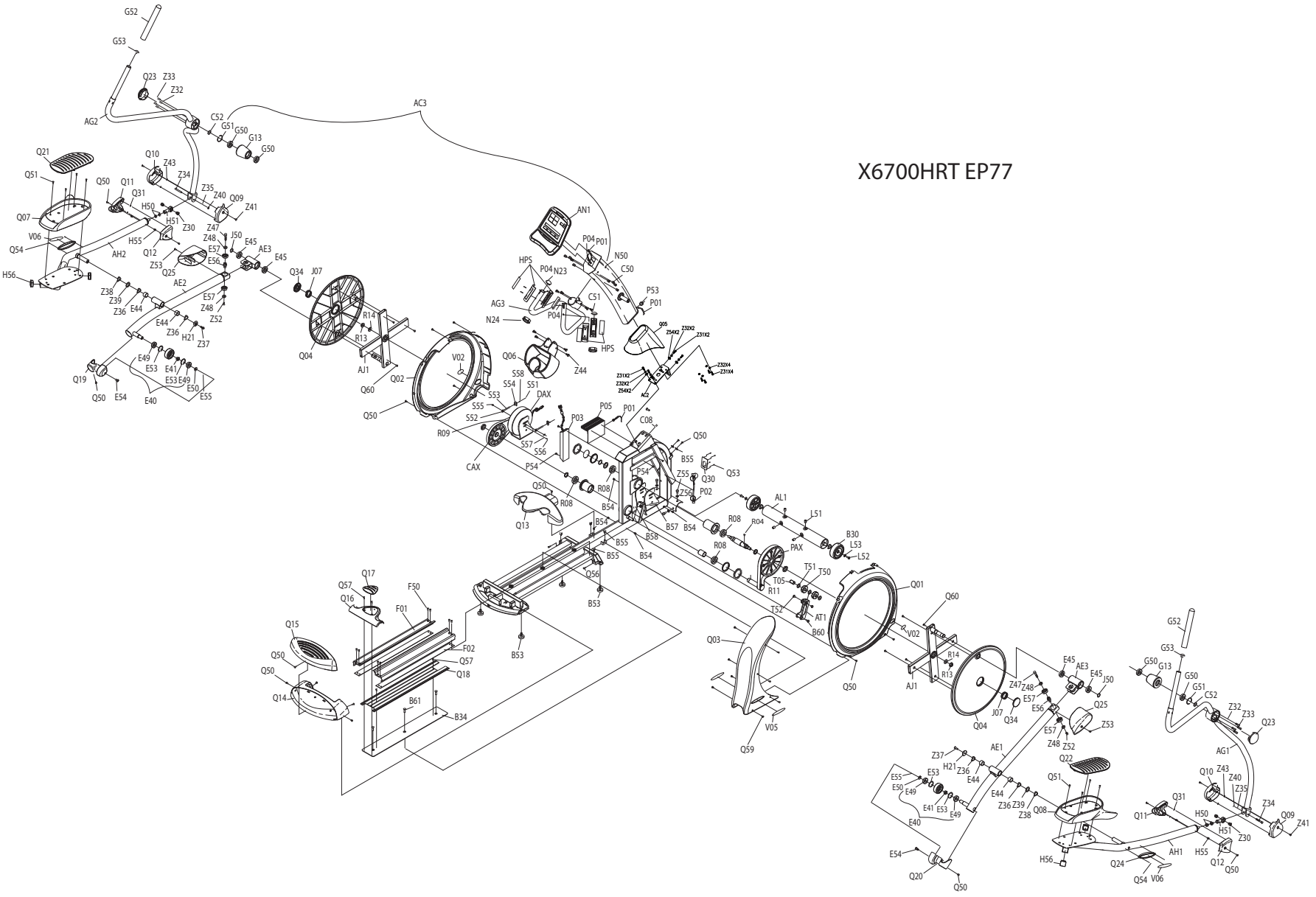X6700HRT EP77