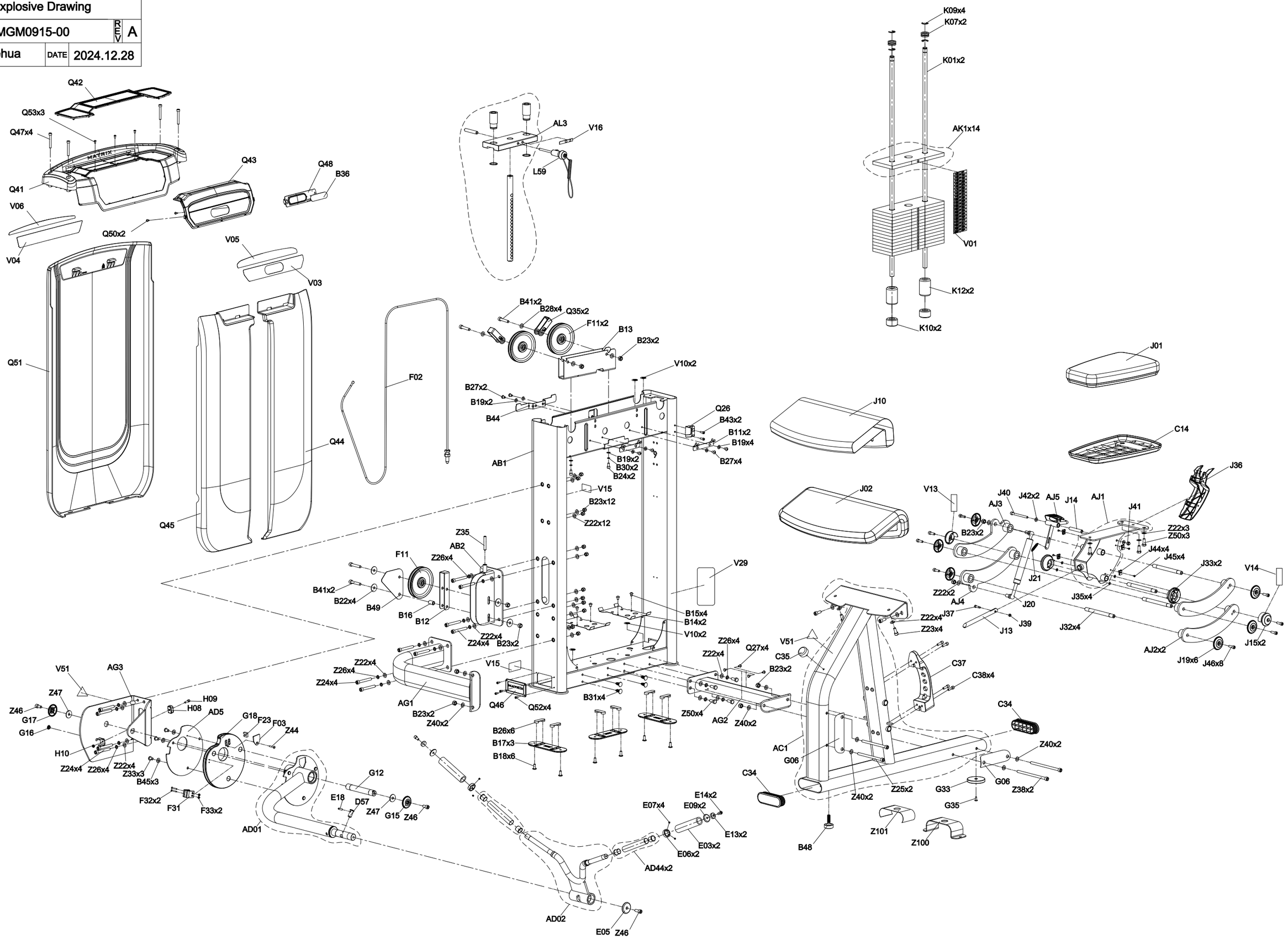DRAWING NO	PG7GM232B-KM		
PART NAME	Explosive Drawing		
PART NO	MGM0915-00	REV	A
APPROVE	SuYehua	DATE	2024.12.28