DRAWING NO	PG3GM236-KM		
PART NAME	Explosive Drawing		
PART NO	MGM0843-00	REV	A
APPROVE	Zhaolin	DATE	2022.07.02

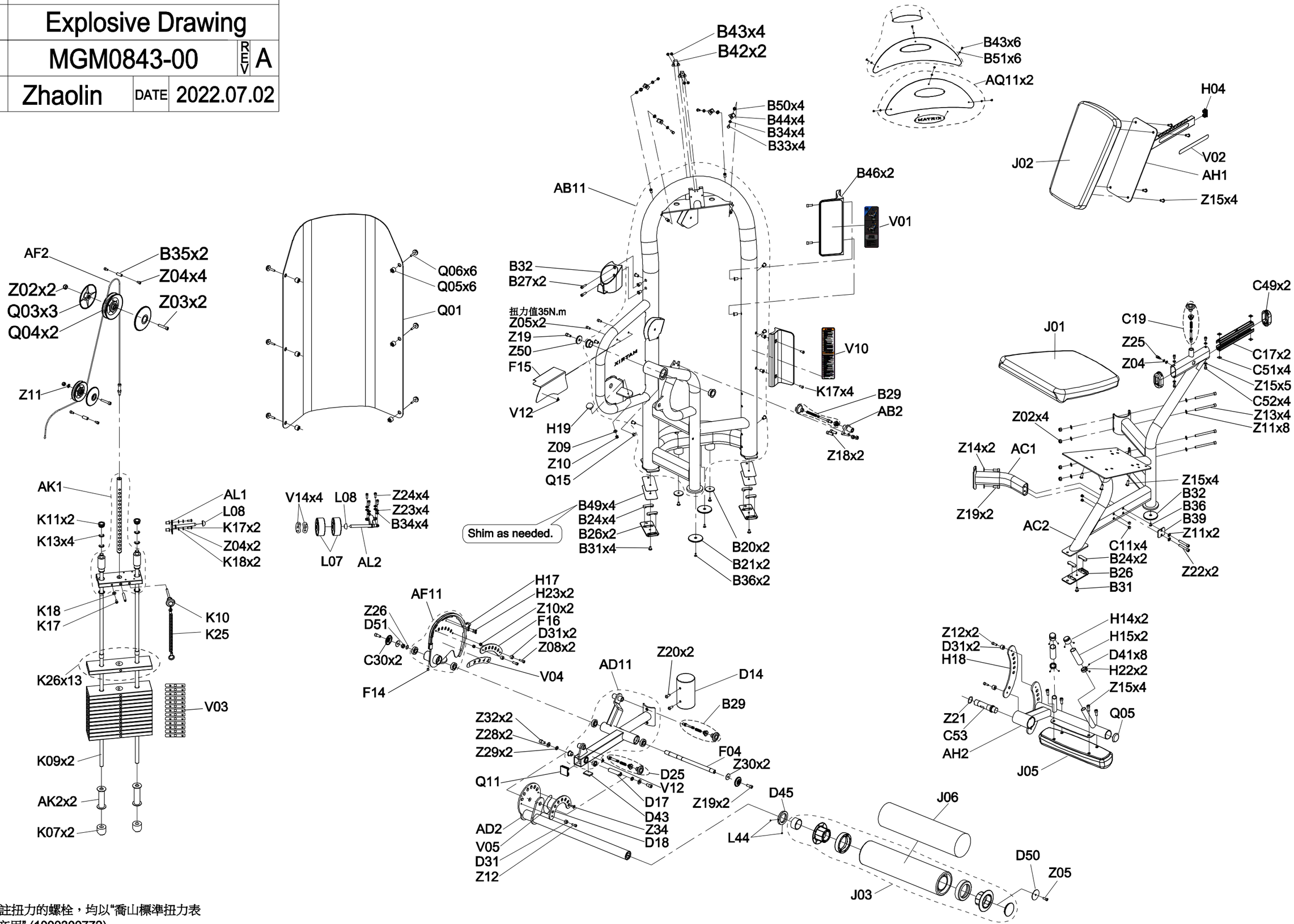

備註

1.圖中未標註扭力的螺栓，均以“喬山標準扭力表 JS019-05-商用” (1000300772)

Bolt without marking torque, according to "JS019-05 " (1000300772) standard execution;