TITLE.			
EXP VIEW DWG- Schwinn 203 Recumbent			
DRAWN E.MAURICE	DOC. PART NO. 005-0308	PRODUCT SKU NO. 3860014	REV. A
DATE 03/15/2012			
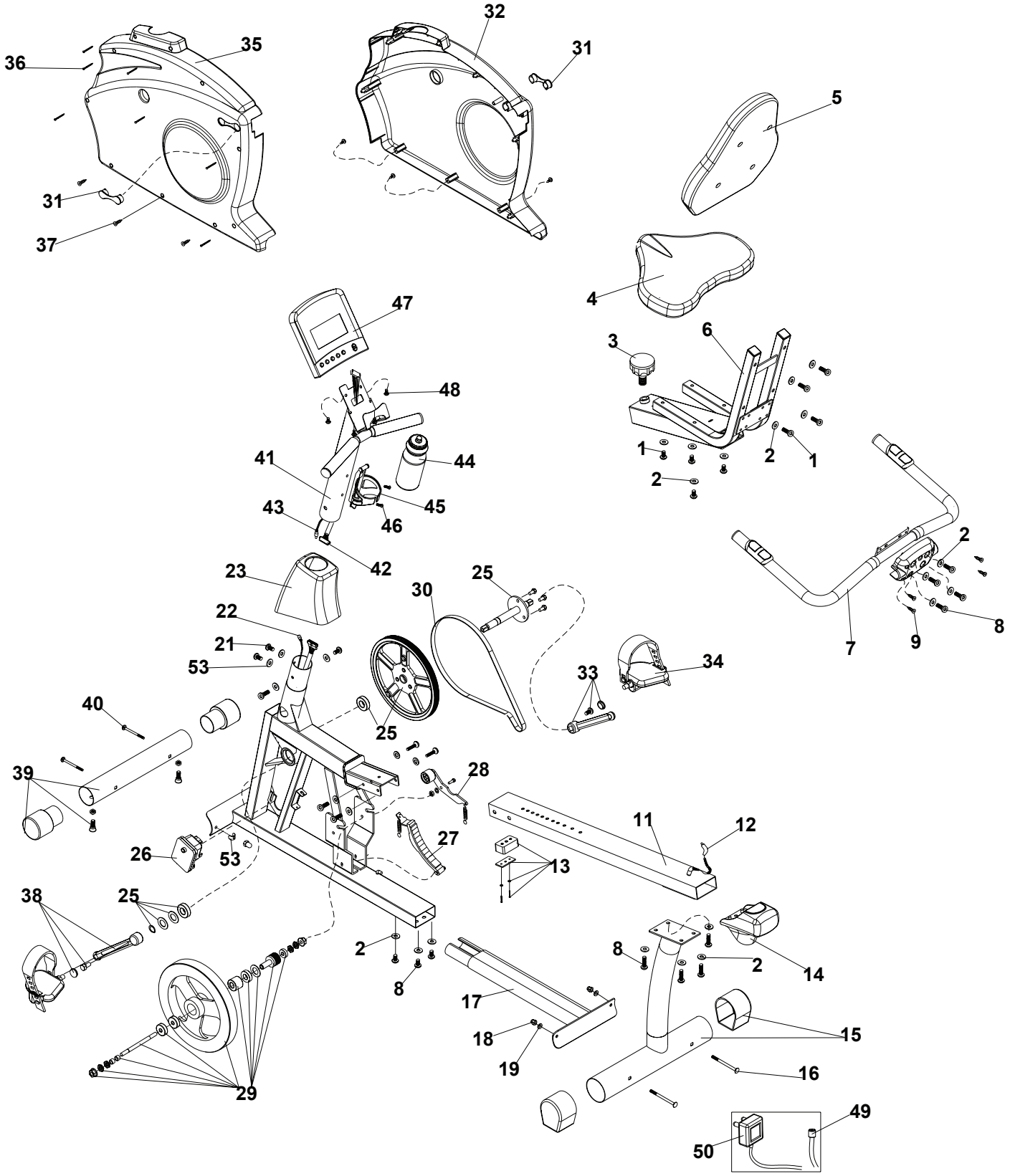
Parts are not available for purchase. Diagrams and part numbers provided for customer knowledge only. Some parts may be available through fitnessrepairparts.com or sportsmith.com.