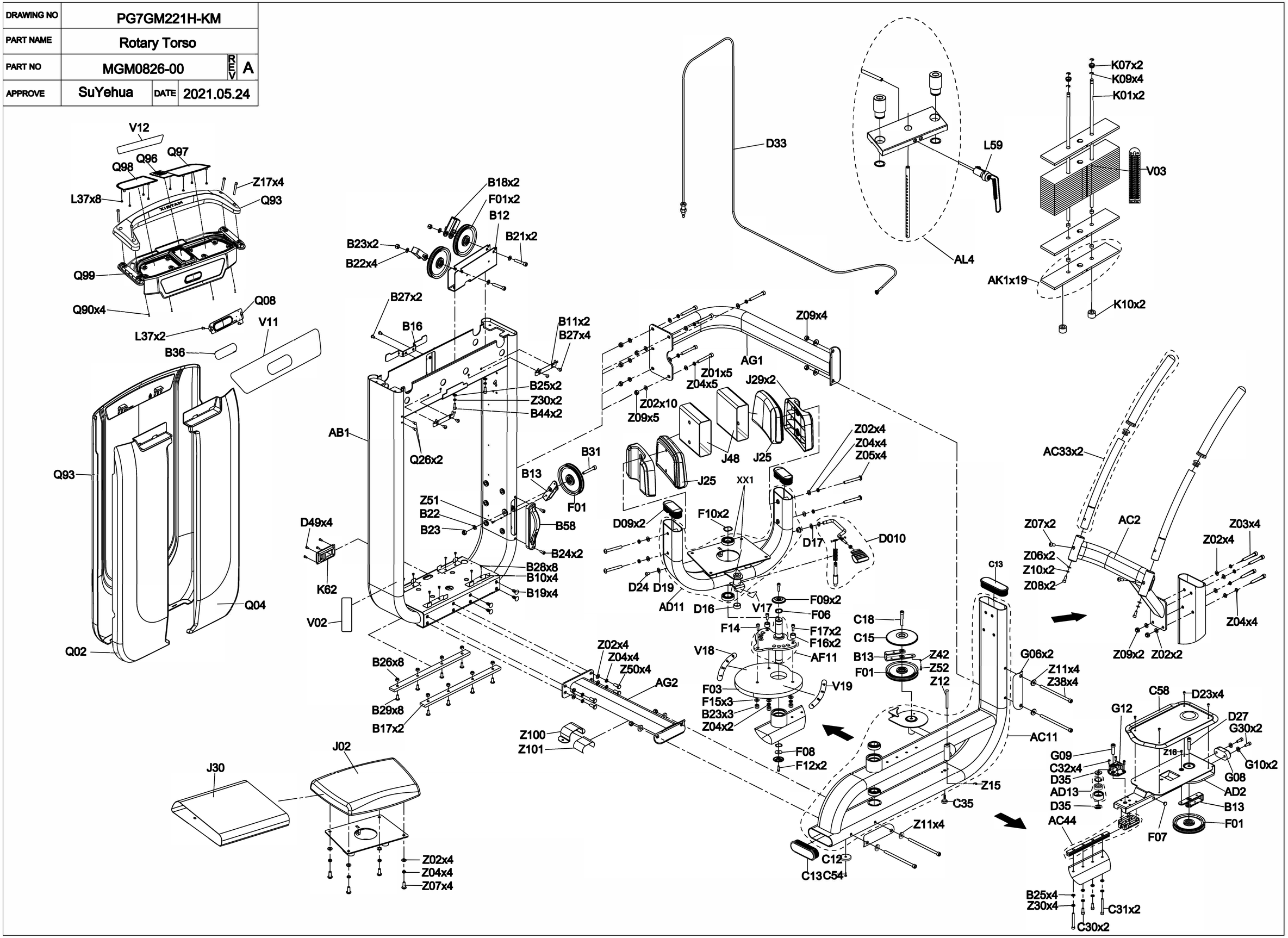DRAWING NO	PG7GM221H-KM		
PART NAME	Rotary Torso		
PART NO	MGM0826-00	REV	A
APPROVE	SuYehua	DATE	2021.05.24