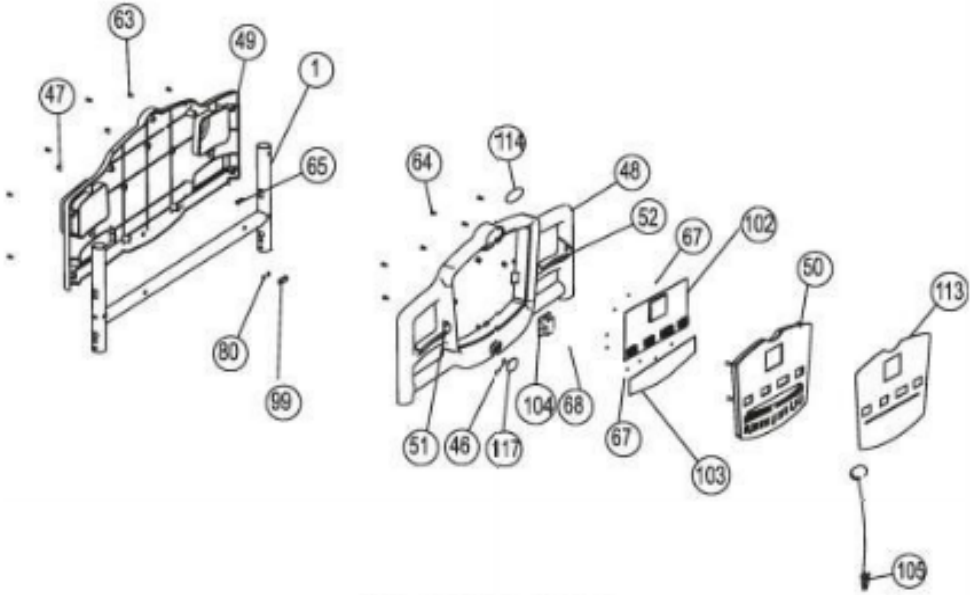
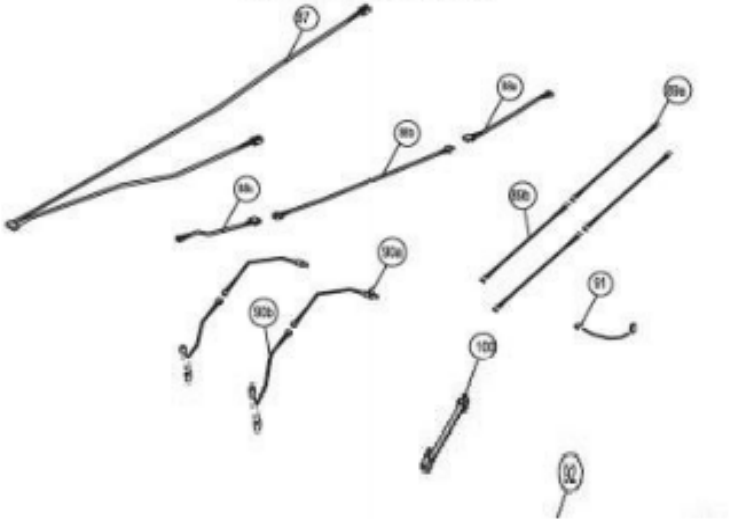
WIRE HARNESS