95XE Cross-Trainer - English/Metric

95XE-0000-05

Parts Manual

1/5/2019 11:33:29 AM

LifeFitness

WHAT WE LIVE FOR

Table of Contents

Bearing Insert Assembly....3
Cables....4
Complete Console Assembly....5
Console Components....6
Console Support and Deadshaft Covers....7
Crank Arm Pulley Assembly....8
Crank Cover and Lower Caps....9
Drive Module....10
Drive Module Hardware....11
Handlebars and Bullhorns....12
Lower Frame Shrouds and Hardware....13
Pedal Lever Assembly Components....14
PCB, Battery, Reed Switch and Bracket....16
References....17
Rocker Arms and Pedal Levers....18
Upper Frame Hardware....19

Bearing Insert Assembly

Service Kit-
MGK62-00002-0044
Includes:

1 - crankshaft
2 - bearings
2 - sets of bearing flanges
4 - weldnuts and flat washers
4 - bolts

Service Kit- GK62-00002-0045
Includes:

1 - intermediate shaft
2 - bearings
2 - sets of bearing flanges
4 - weldnuts and flat washers
4 - bolts

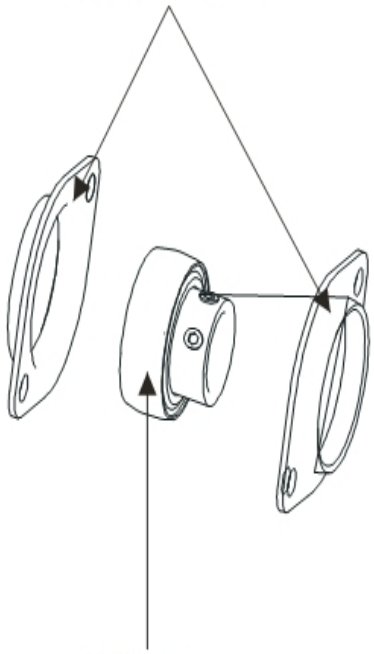

Ref #	Part Number	Qty	Description
-	0K62-01220-0000	4	Bearing Flange
-	GK62-00002-0045	2	Intermediate Shaft Bearing Kit
-	0K62-01221-0000	2	1" Bearing
-	AK62-00299-0000	2	Bearing Insert Assembly
-	GK62-00002-0044	2	Crankshaft Bearing Kit

Cables

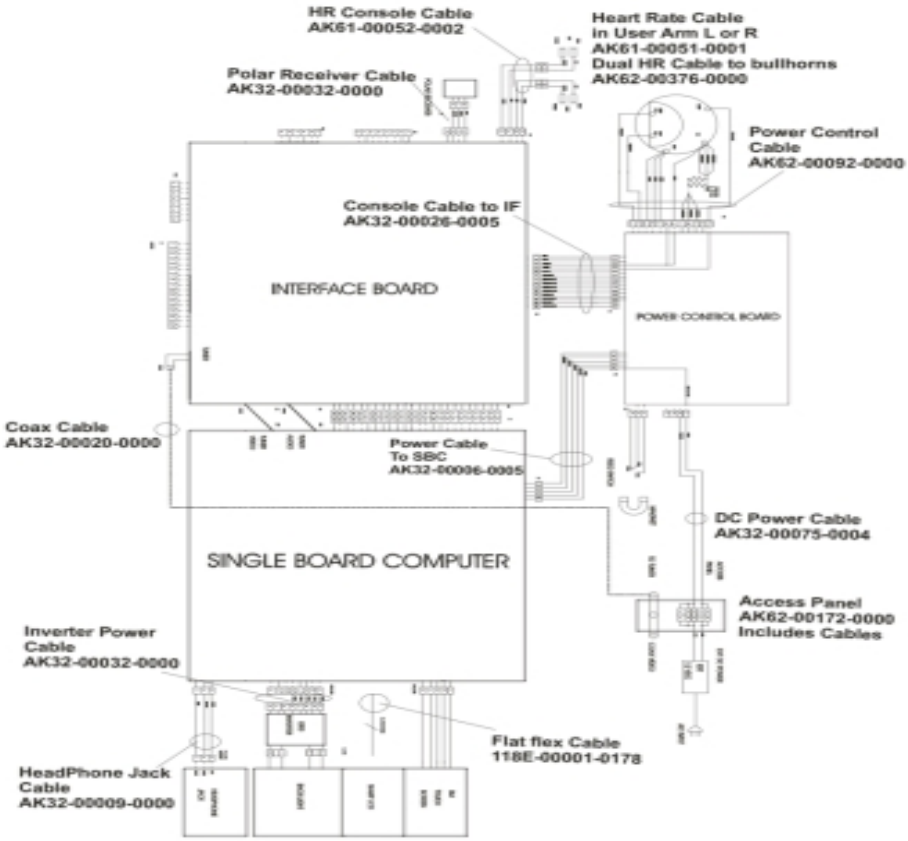

Ref #	Part Number	Qty	Description
-	118E-00001-0178	2	Flat Flex Cable
-	AK32-00020-0000	2	68" COAX CABLE
-	AK32-00009-0000	2	Headphone Jack Cable
-	AK32-00026-0005	2	Console Cable to Interface
-	AK62-00376-0000	2	Dual HR Cable to bullhorns
-	AK32-00075-0004	2	DC Power Cable
-	AK61-00052-0002	2	Lifepulse Sensor Cable
-	AK32-00006-0005	2	Power Cable to SBC
-	AK61-00051-0001	2	Lifepulse: User-Arm
-	AK62-00092-0000	2	Power Control Cable
-	AK62-00172-0000	2	Access Panel
-	AK32-00032-0000	4	Inverter Cable

Complete Console Assembly

Ref #	Part Number	Qty	Description
-	AK62-00369-0001	2	Console Assembly NTSC English

Console Components

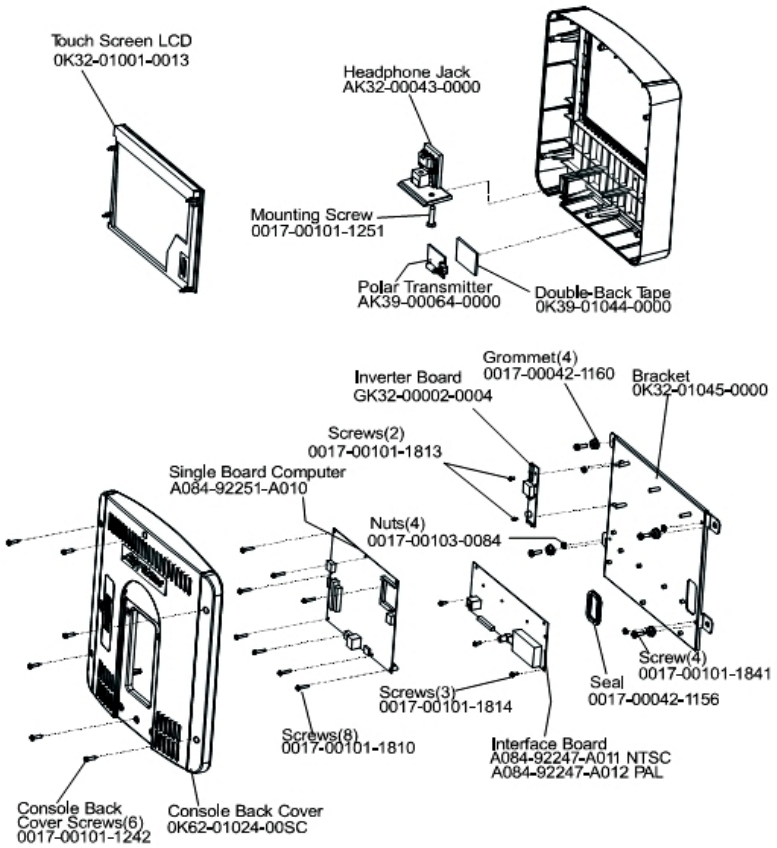

Ref #	Part Number	Qty	Description
-	0K39-01044-0000	2	Tape
-	0017-00042-1160	8	Grommet
-	0017-00101-1251	2	Hardware: Console Case Screws
-	A084-92247-A011	2	Interface Boards NTSC
-	118E-00001-0259	2	Wireless Receiver Module, Non-Coded
-	0017-00101-1810	16	Hardware: Screw
-	A084-92251-A010	2	Single Board Computer
-	0017-00103-0084	8	Hardware: Nut
-	0017-00101-1242	12	Hardware: Phillips Pan Screw 0.75"
-	0K32-01001-0013	2	LCD Touchscreen Assembly
-	0K32-01001-0013	2	LCD Touchscreen Assembly
-	GK32-00002-0004	2	Inverter Board
-	0K32-01001-0013	2	LCD Touchscreen Assembly
-	0K32-01001-0013	2	LCD Touchscreen Assembly
-	AK32-00043-0000	2	Headphone Jack
-	0017-00042-1156	2	Edge Trim
-	0K32-01045-0000	2	Console Bracket
-	0017-00101-1841	8	Hardware: Screw
-	0017-00101-1814	6	Hardware: Screw
-	0017-00101-1813	4	Hardware: Inverter Board Screw

Console Support and Deadshaft Covers

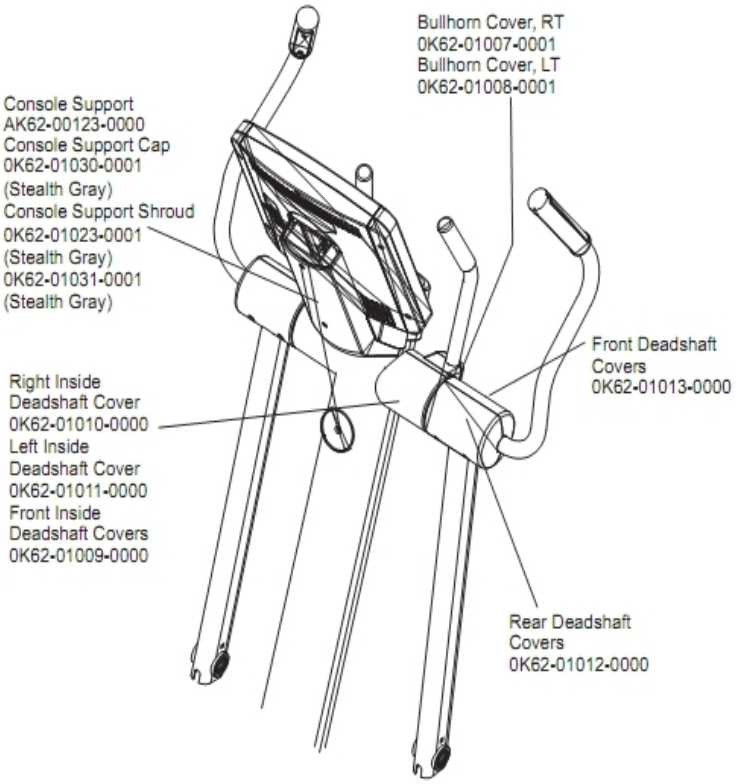

Ref #	Part Number	Qty	Description
-	0K62-01023-0001	2	Console Support Shroud
-	0K62-01031-0001	2	Cap
-	0K62-01011-0000	2	Left Inside Deadshaft Cover
-	0K62-01008-0001	2	Bullhorn Cover Left
-	0K62-01007-0001	2	Bullhorn Cover Right
-	0K62-01009-0000	2	Front Inside Deadshaft Cover
-	0K62-01010-0000	2	Right Inside Deadshaft Cover
-	AK62-00123-0000	2	Console Support
-	0K62-01030-0001	2	Console Support Cap
-	0K62-01013-0000	4	Rear Outside Deadshaft Cover

Crank Arm Pulley Assembly

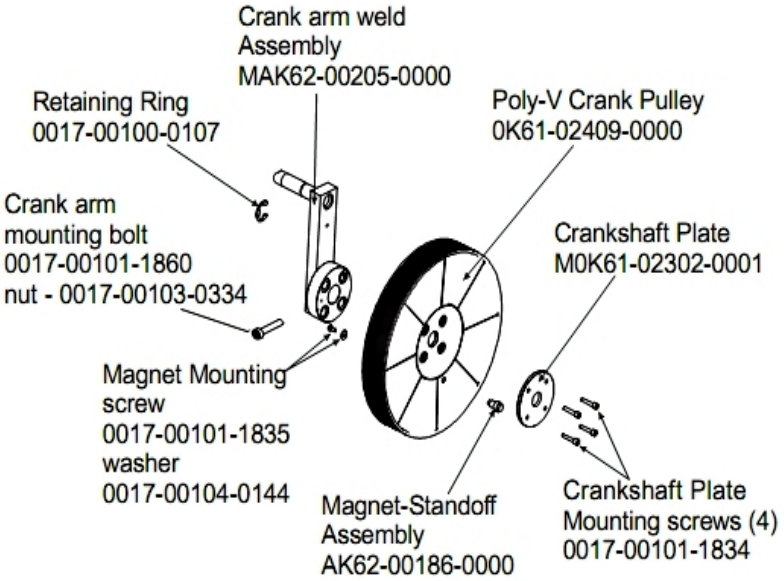

Ref #	Part Number	Qty	Description
-	0K61-02409-0000	2	Poly-V Crank Pulley
-	0017-00103-0334	2	Hardware: Nut 10 MM
-	0K61-02302-0001	2	Crankshaft Plate
-	0017-00100-0107	2	Hardware: E-Ring 1"
-	0017-00101-1834	8	Hardware: Screw 24MM
-	0017-00101-1860	2	Hardware: Crankarm Bolt 65MM
-	0017-00101-1835	2	Hardware: Screw 10MM
-	AK62-00186-0000	2	Magnet-Standoff Assembly
-	0017-00104-0144	2	Hardware: Washer 0.625" OD
-	AK62-00205-0000	2	Crankarm

Crank Cover and Lower Caps

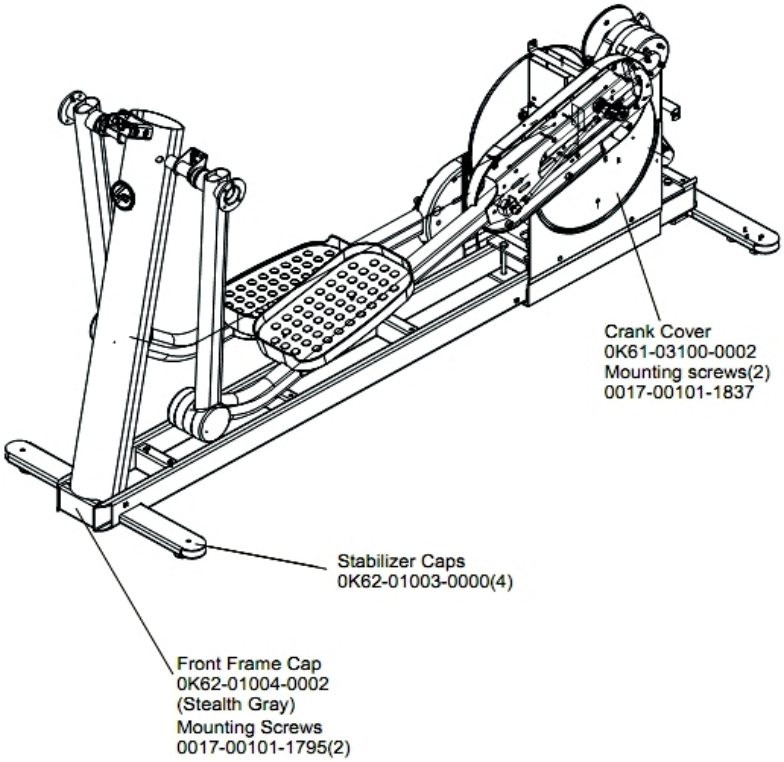

Ref #	Part Number	Qty	Description
-	0K62-01004-0002	2	Front frame Cap
-	0017-00101-1837	4	Hardware: Screw 18MM
-	0K68-01130-0200	8	CAP; STABILIZER; SHADOW GREY
-	0017-00101-1795	4	Hardware: Mounting Screw
-	0K61-03100-0002	2	Crank Cover

Drive Module

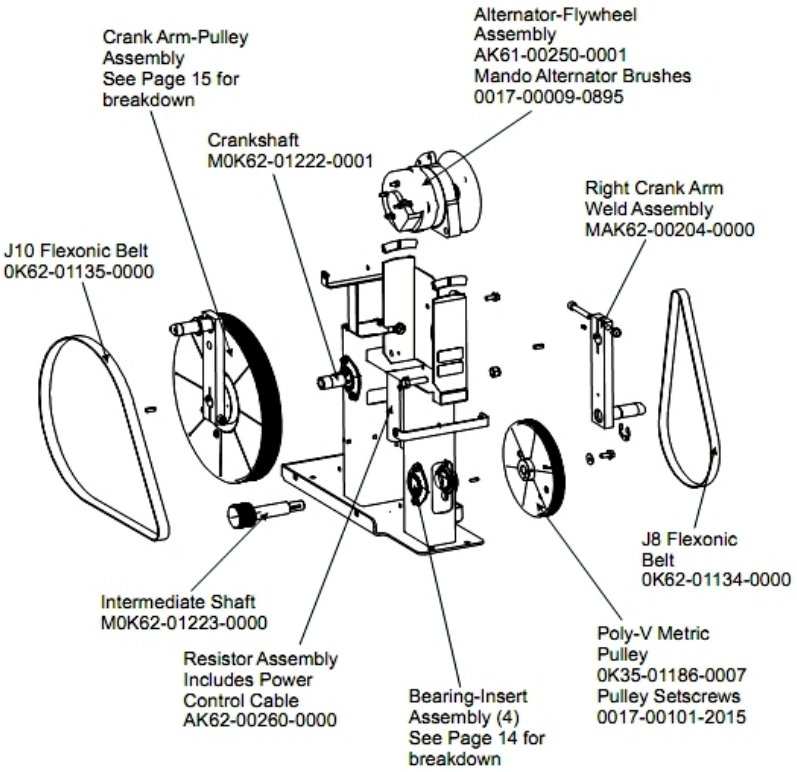

Ref #	Part Number	Qty	Description
-	0K62-01134-0000	2	Flexonic Belt
-	0017-00101-2015	4	Hardware: Pulley Set Screw 15 MM
-	AK61-00250-0001	2	Alternator w/Flywheel
-	AK62-00260-0000	2	Resistor Assembly
-	0K62-01135-0000	2	Drive Belt
-	0K62-01223-0000	2	Intermediate Shaft
-	0K35-01186-0007	2	Poly-V Pulley
-	AK62-00204-0000	2	Right Crankarm
-	0017-00009-0895	2	Alternator Brush Kit
-	0K62-01222-0001	2	Crankshaft

Drive Module Hardware

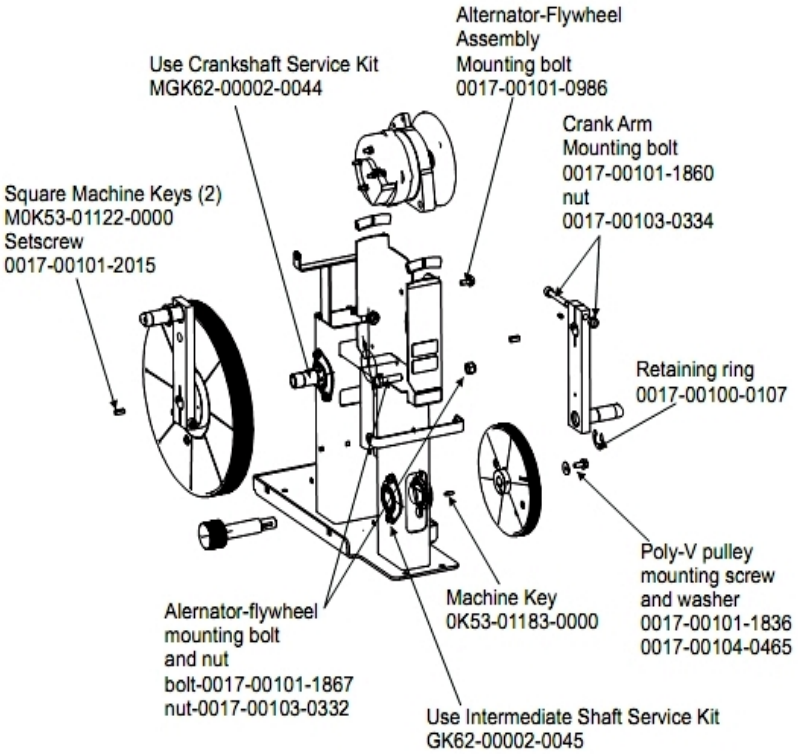

Ref #	Part Number	Qty	Description
-	0017-00101-0986	2	Hardware: Bolt 0.75"
-	0017-00101-1860	2	Hardware: Crankarm Bolt 65MM
-	0017-00103-0332	2	Hardware: Mounting Nut
-	0017-00101-1836	2	Hardware: Screw 10 MM
-	0017-00101-2015	2	Hardware: Pulley Set Screw 15 MM
-	0017-00103-0334	2	Hardware: Nut 10 MM
-	0017-00104-0465	2	Hardware: Flat Washer 23MM OD
-	0K53-01183-0000	2	Hex key
-	0017-00100-0107	2	Hardware: E-Ring 1"
-	0017-00101-1867	2	Hardware: Mounting Bolt 45 MM
-	GK62-00002-0045	2	Intermediate Shaft Bearing Kit
-	0K53-01122-0000	4	Square Key
-	GK62-00002-0044	2	Crankshaft Bearing Kit

Handlebars and Bullhorns

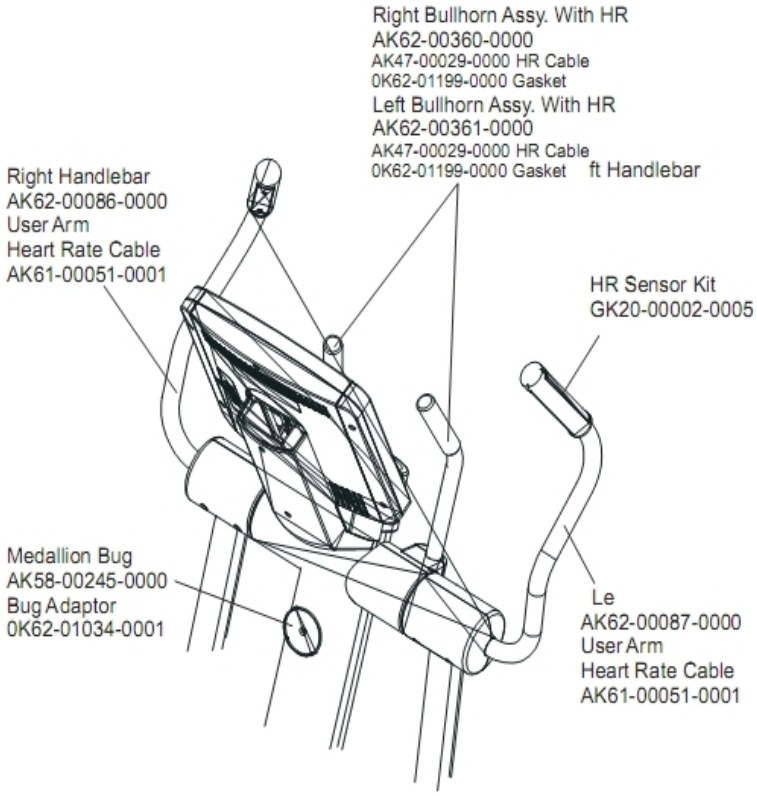

Ref #	Part Number	Qty	Description
-	0K62-01199-0000	4	Bullhorn Gasket
-	0K62-01034-0001	2	Bug Adaptor
-	AK62-00360-0000	2	Right Bullhorn
-	AK58-00245-0000	2	Bug Medallion
-	AK62-00087-0000	2	Handlebar: Left
-	AK62-00361-0000	2	Left Bullhorn
-	AK47-00029-0000	4	Lifepulse Cable
-	AK62-00086-0000	2	Handlebar: Right
-	AK61-00051-0001	4	Lifepulse: User-Arm
-	GK20-00002-0005	2	Heart Rate Electrode Kit

Lower Frame Shrouds and Hardware

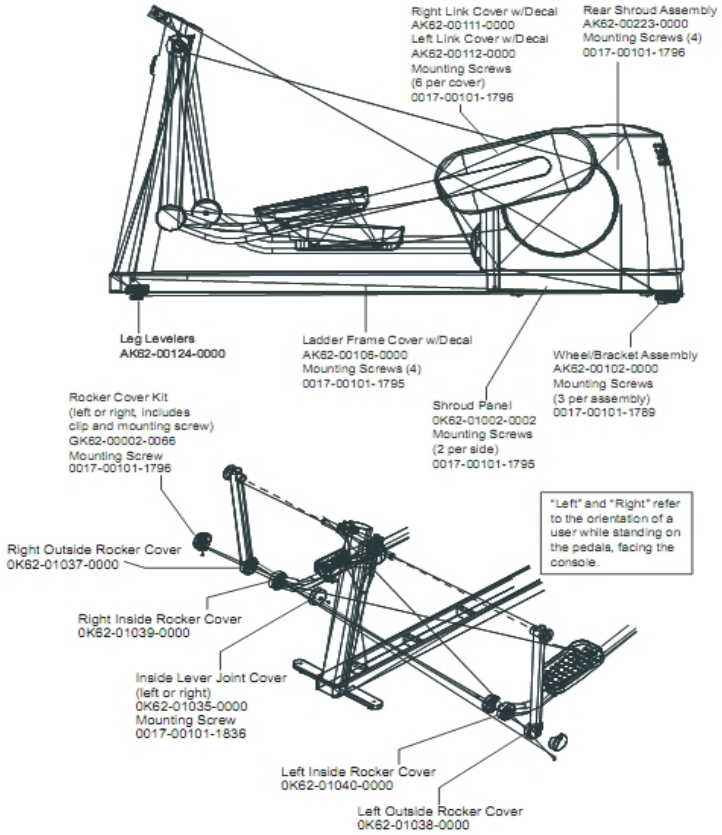

Ref #	Part Number	Qty	Description
-	AK62-00111-0000	2	Link Cover with Decal: Right
-	AK62-00124-0000	4	Leg Leveler
-	0K62-01038-0000	2	Left Inside Rocker Cover
-	0K62-01037-0000	2	
-	AK62-00112-0000	2	Link Cover with Decal: Left
-	GK62-00002-0066	2	Rocker Cover Kit
-	0017-00101-1795	16	Hardware: Mounting Screw
-	0017-00101-1836	2	Hardware: Screw 10 MM
-	AK62-00102-0000	4	Wheel/Bracket Assembly
-	AK62-00223-0000	2	Rear Shroud Assembly
-	0K62-01002-0003	2	Shroud Panel
-	0017-00101-1789	12	Hardware: Mounting Screws
-	0K62-01039-0000	2	Right Inside Lever Joint Cover
-	0017-00101-1796	34	Hardware: Mounting Screw 19 MM
-	0K62-01040-0000	2	Left Inside Lever Joint Cover
-	AK62-00106-0001	2	Ladder Frame Cover with Decal
-	0K62-01035-0000	2	Inside Lever Joint Cover

Pedal Lever Assembly Components

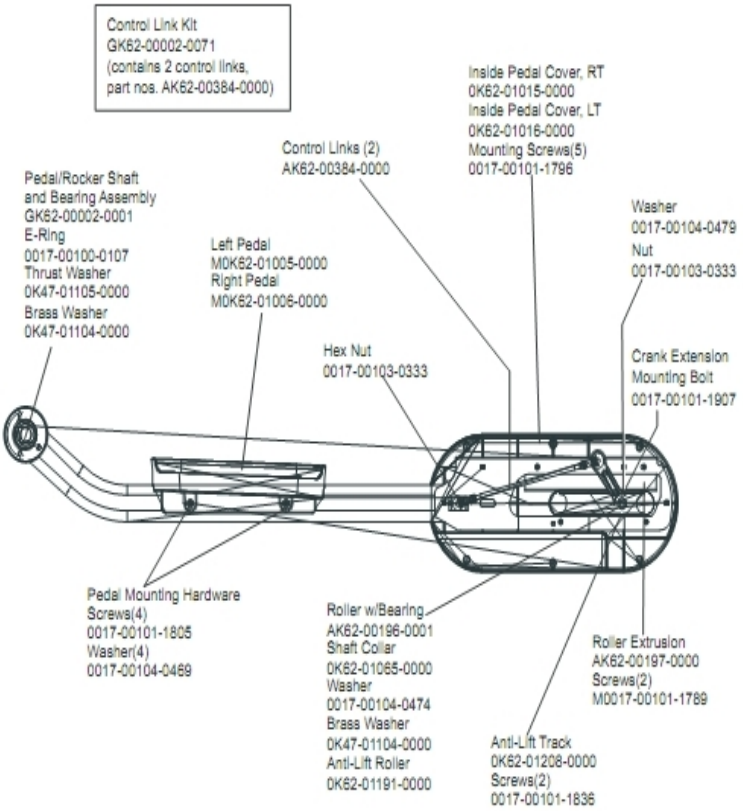

Ref #	Part Number	Qty	Description
-	0K62-01015-0000	4	Inside Pedal Cover Right
-	0K47-01104-0000	8	Hardware: Thrust Washer
-	0017-00100-0107	4	Hardware: E-Ring 1"
-	AK62-00196-0001	4	Roller with Bearing
-	AK62-00197-0000	4	Roller Extrusion
-	GK62-00002-0001	4	Pedal/Rocker Shaft and Bearings
-	GK62-00002-0071	20	Control Link Kit
-	M0017-00101-1789	8	Hardware: Screw
-	M0K62-01065-0000	4	Shaft Collar
-	0K62-01005-0000	2	Left Pedal
-	0K62-01006-0000	2	Right Pedal
-	0K62-01016-0000	4	Inside Pedal Cover Left
-	0K62-01208-0000	4	Anti-Lift Track
-	M0K62-01191-0000	4	Anti-Lift Roller
-	0017-00101-1796	20	Hardware: Mounting Screw 19 MM
-	0017-00104-0474	4	Hardware: Washer
-	0017-00104-0479	4	Hardware: Flat Washer 25.4MM OD
-	0017-00101-1836	8	Hardware: Screw 10 MM
-	0017-00104-0469	16	Hardware: Flat Washer 16MM OD
-	0017-00101-1907	4	Hardware: Crank Extension Mounting Bolt
-	0K47-01105-0000	4	Hardware: Hardened Thrust Washer
-	0017-00103-0333	8	Hardware: Hex Nut

Ref #	Part Number	Qty	Description
-	0017-00101-1805	16	Hardware: TORX Screw 25 MM

PCB, Battery, Reed Switch and Bracket

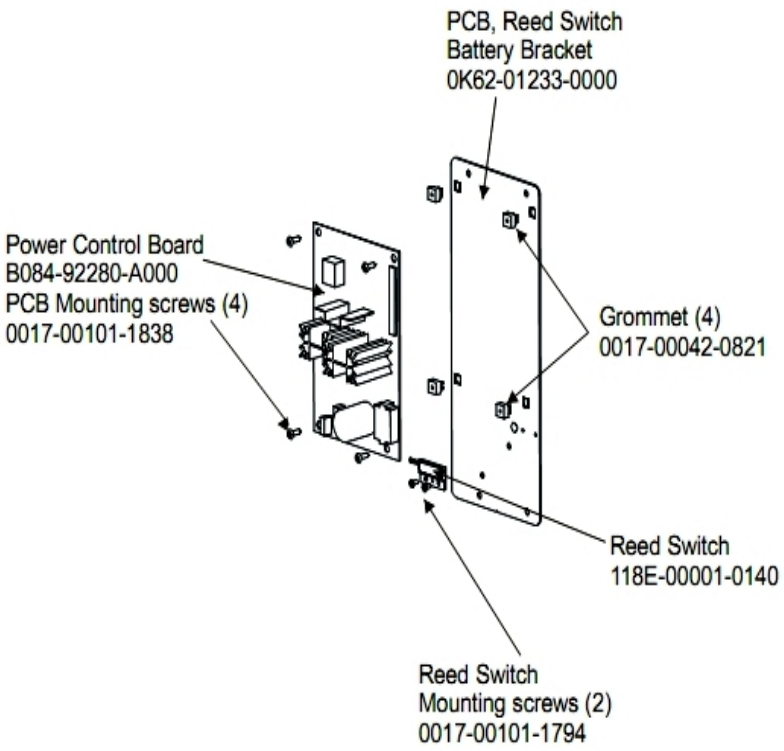

Ref #	Part Number	Qty	Description
-	0017-00042-0821	8	Hardware: Plastic Grommet
-	0017-00101-1794	4	Hardware: Screw 10MM
-	118E-00001-0140	2	Reed Switch SPDT
-	B084-92280-A000	2	Power Control Board
-	0K62-01233-0000	2	PCB Reed Switch Battery Bracket
-	0017-00101-1838	8	Hardware: Mounting Screw 19 MM

References

Ref #	Part Number	Qty	Description
-	AK32-00075-0004	2	DC Power Cable
-	0017-00021-2846	2	F-Type Panel Connector
-	AK32-00020-0000	2	68" COAX CABLE
-	0K62-01179-0000	2	Bracket: Access Panel C
-	118E-00001-0161	2	Power Supply 12V 4.5A Without Line Cord
-	0017-00008-0206	2	.33oz Pen - Arctic Silver
-	0017-00008-0205	2	5 oz Bottle - Arctic Silver
-	0017-00003-0889	1	Line Cord Cont U.K. 10A
-	0017-00003-0918	1	Line Cord - Australia
-	AK62-00152-0001	2	Hardware Bag
-	0017-00008-0204	2	Paint Spray Can - Arctic Silver
-	AK62-00172-0000	2	Access Panel
-	0017-00003-0691	1	Line Cord Cont 10A 250 V
-	0017-00003-0704	2	Line Cord 10A 125 V

Rocker Arms and Pedal Levers

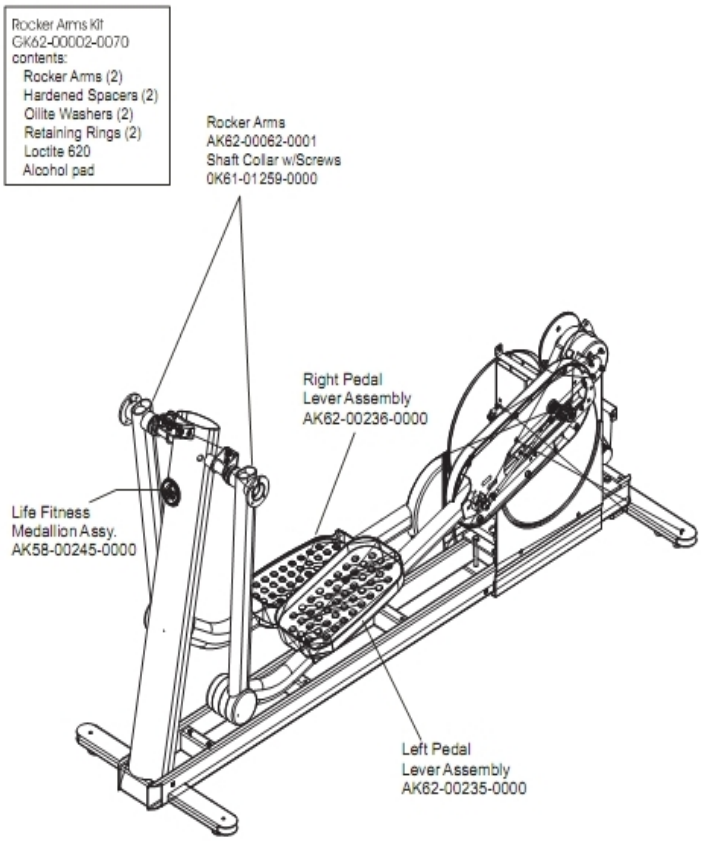

Ref #	Part Number	Qty	Description
-	AK58-00245-0000	2	Bug Medallion
-	GK62-00002-0070	6	Rocker Arm Kit
-	AK62-00236-0000	2	Right Pedal Lever Assembly
-	0K61-01259-0000	4	Shaft Split Collar
-	AK62-00235-0000	2	Left Pedal Lever Assembly

Upper Frame Hardware

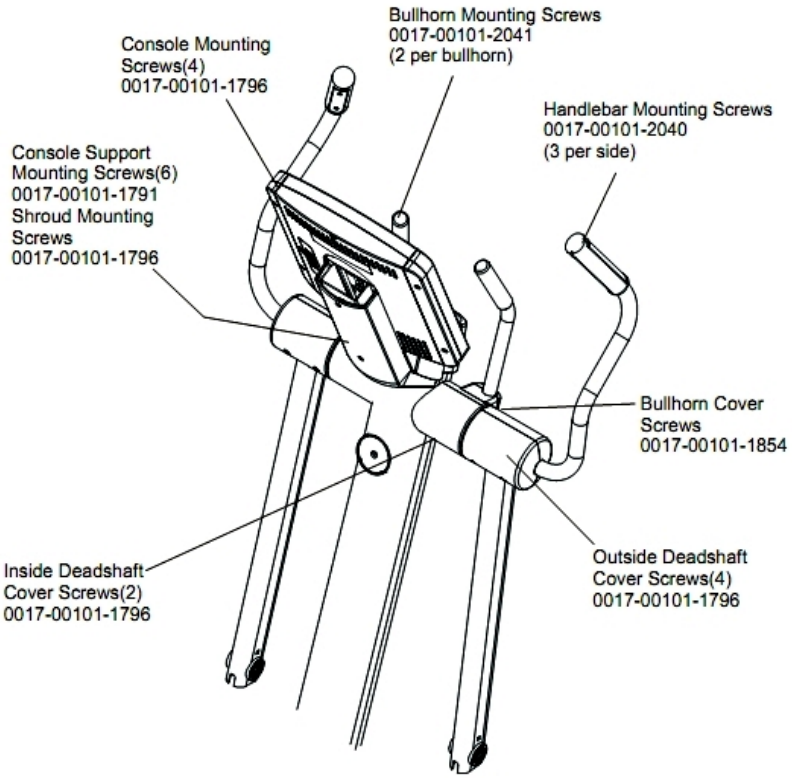

Ref #	Part Number	Qty	Description
-	0017-00101-2041	8	Hardware: Bullhorn Mounting Screw
-	0017-00101-1854	4	Hardware: Bullhorn Cover Screw 44MM
-	0017-00101-2040	12	Hardware: Handlebar Mounting Screw
-	0017-00101-1796	22	Hardware: Mounting Screw 19 MM
-	0017-00101-1791	12	Hardware: TORX Screw 19 MM
-	0017-00101-1846	8	Hardware: Phillips Pan Screw 10 MM
-	0K62-01022-0001	2	Accessory Tray