TR-7500
TREADMILL

GK26-00009-XXXX

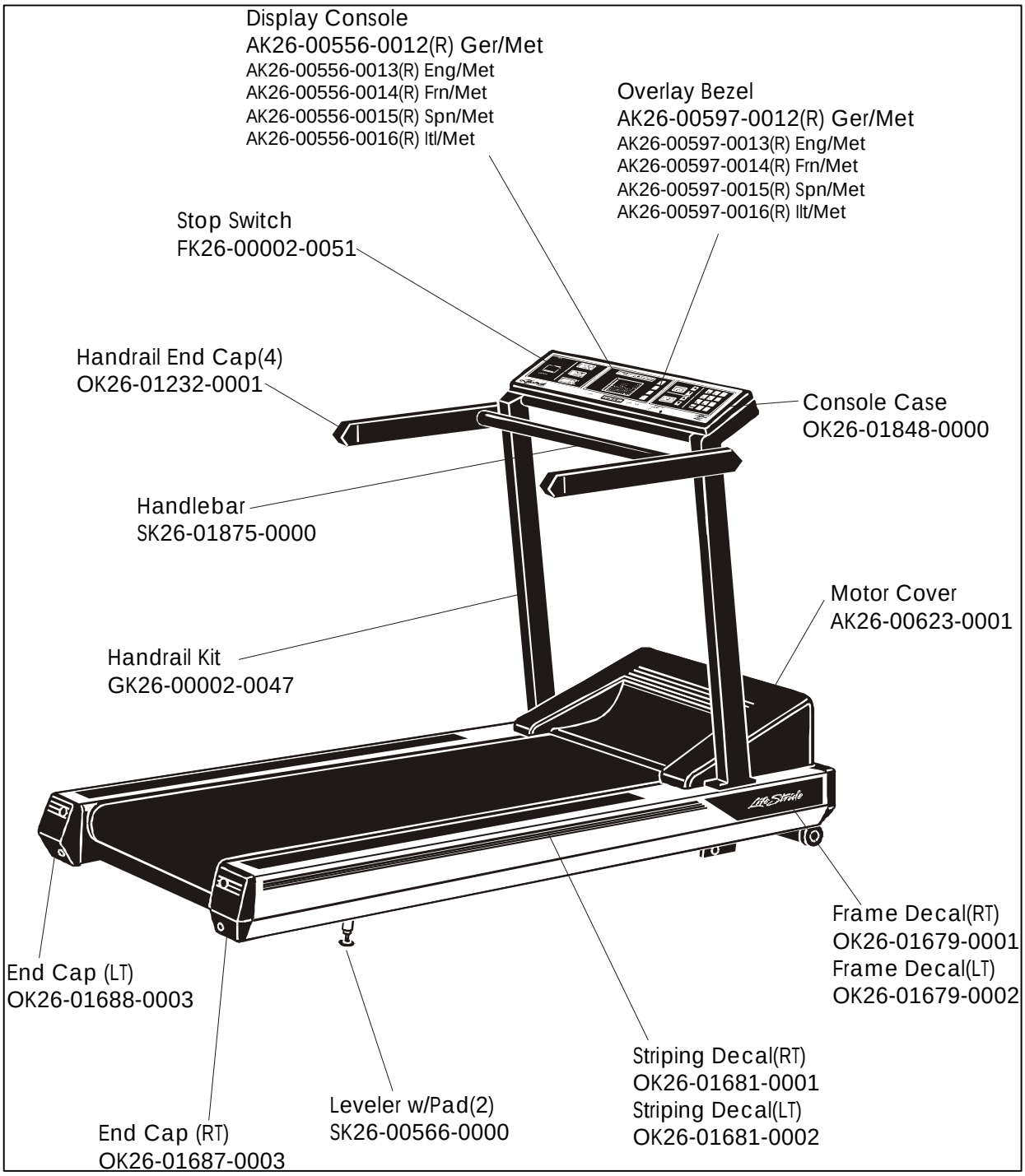

Revision Date: 11/6/98

TR-7500
TREADMILL

GK26-00009-XXXX

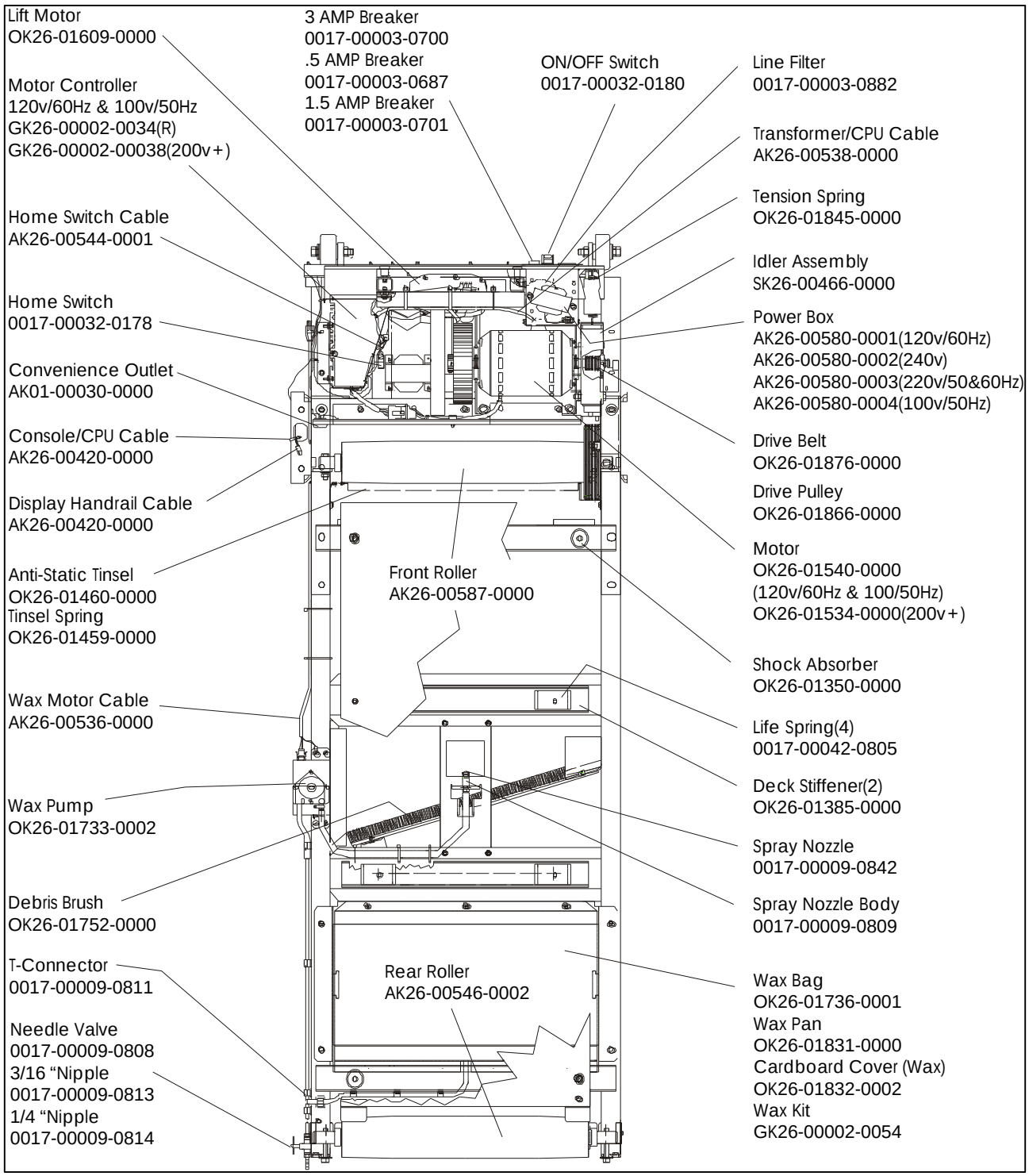

Revision Date: 11/6/98

TR-7500
TREADMILL

GK26-00009-XXXX

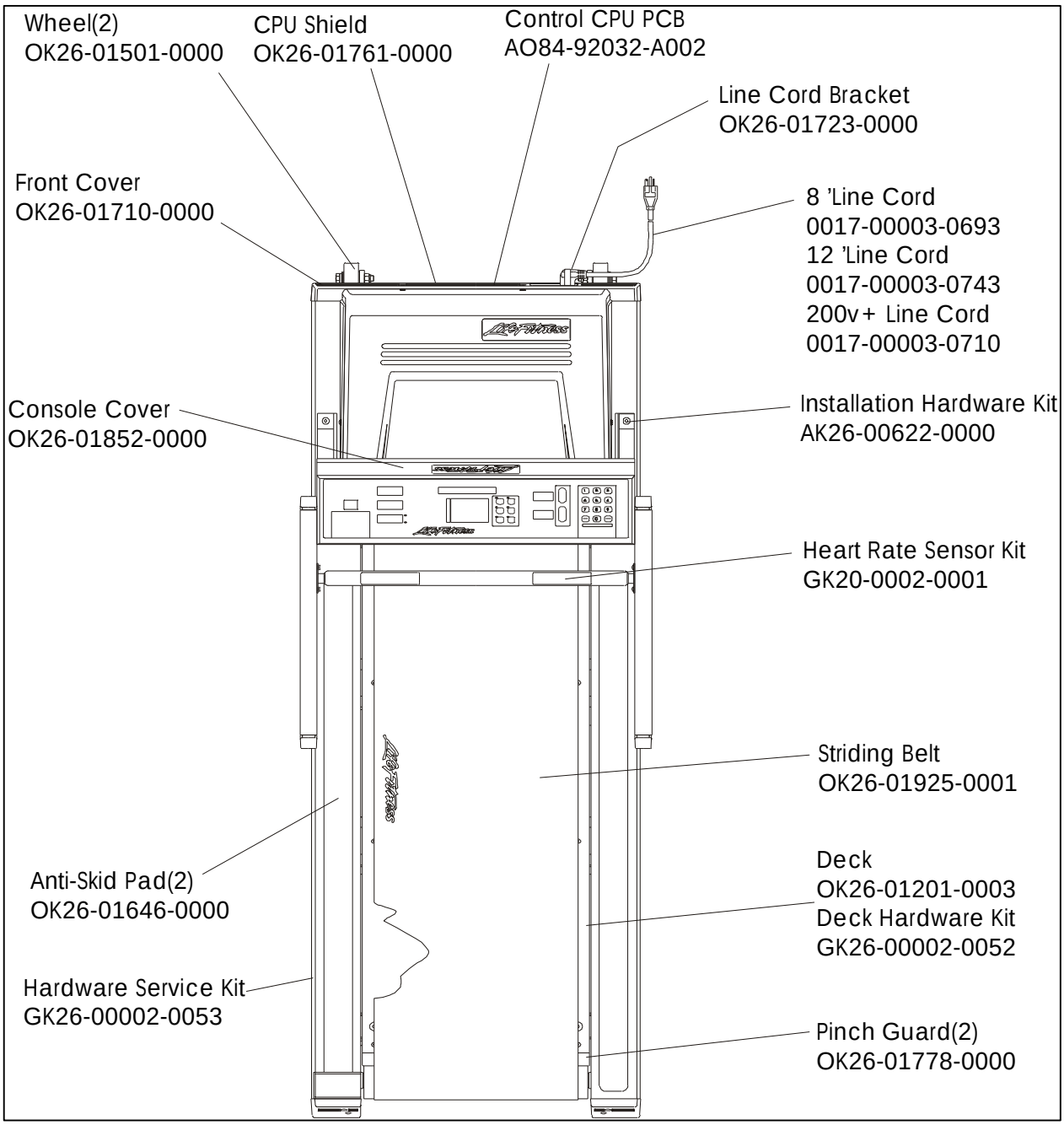

Revision Date: 11/6/98