END OF LIFE

TR-9000
Treadmill

GK45-00011-XXXX
SN 344637-344672

Rev. 12 Sep 2007

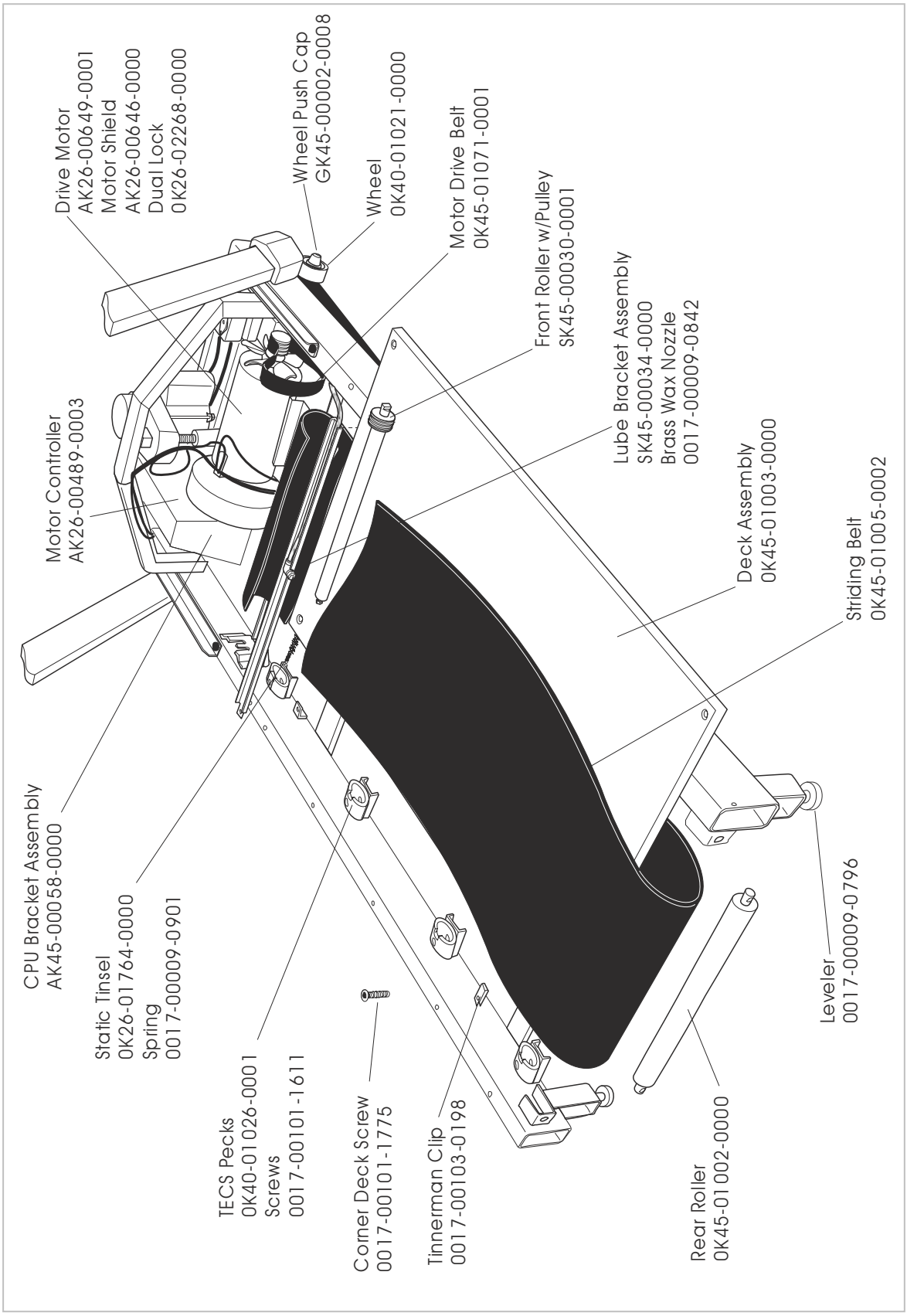
Drive Motor
AK26-00649-0001
Motor Shield
AK26-00646-0000
Dual Lock
0K26-02268-0000
Wheel Push Cap
GK45-00002-0008
Wheel
0K40-01021-0000
Motor Drive Belt
0K45-01071-0001
Front Roller w/Pulley
SK45-00030-0001
Lube Bracket Assembly
SK45-00034-0000
Brass Wax Nozzle
0017-00009-0842
Motor Controller
AK26-00489-0003
Deck Assembly
0K45-01003-0000
Striding Belt
0K45-01005-0002
CPU Bracket Assembly
AK45-00058-0000
Static Tinsel
0K26-01764-0000
Spring
0017-00009-0901
Leveler
0017-00009-0796
TECS Pecks
0K40-01026-0001
Screws
0017-00101-1611
Corner Deck Screw
0017-00101-1775
Tinnerman Clip
0017-00103-0198
Rear Roller
0K45-01002-0000

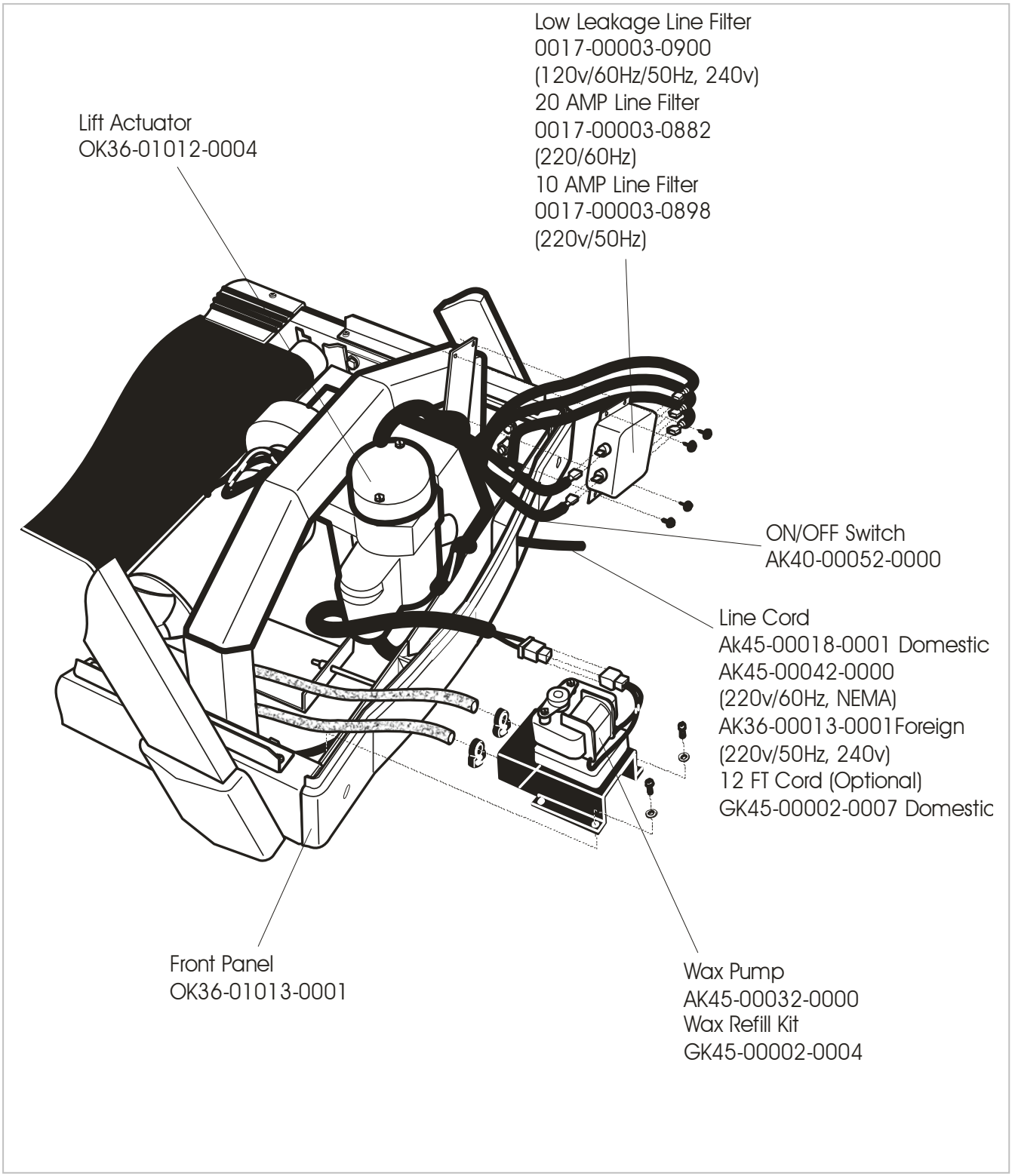
Low Leakage Line Filter
0017-00003-0900
(120v/60Hz/50Hz, 240v)
20 AMP Line Filter
0017-00003-0882
(220/60Hz)
10 AMP Line Filter
0017-00003-0898
(220v/50Hz)
Lift Actuator
OK36-01012-0004
ON/OFF Switch
AK40-00052-0000
Line Cord
Ak45-00018-0001 Domestic
AK45-00042-0000
(220v/60Hz, NEMA)
AK36-00013-0001Foreign
(220v/50Hz, 240v)
12 FT Cord (Optional)
GK45-00002-0007 Domestic
Front Panel
OK36-01013-0001
Wax Pump
AK45-00032-0000
Wax Refill Kit
GK45-00002-0004