END OF LIFE

LC-8500
EXERCISE BIKE

GE09-00022-XXXX

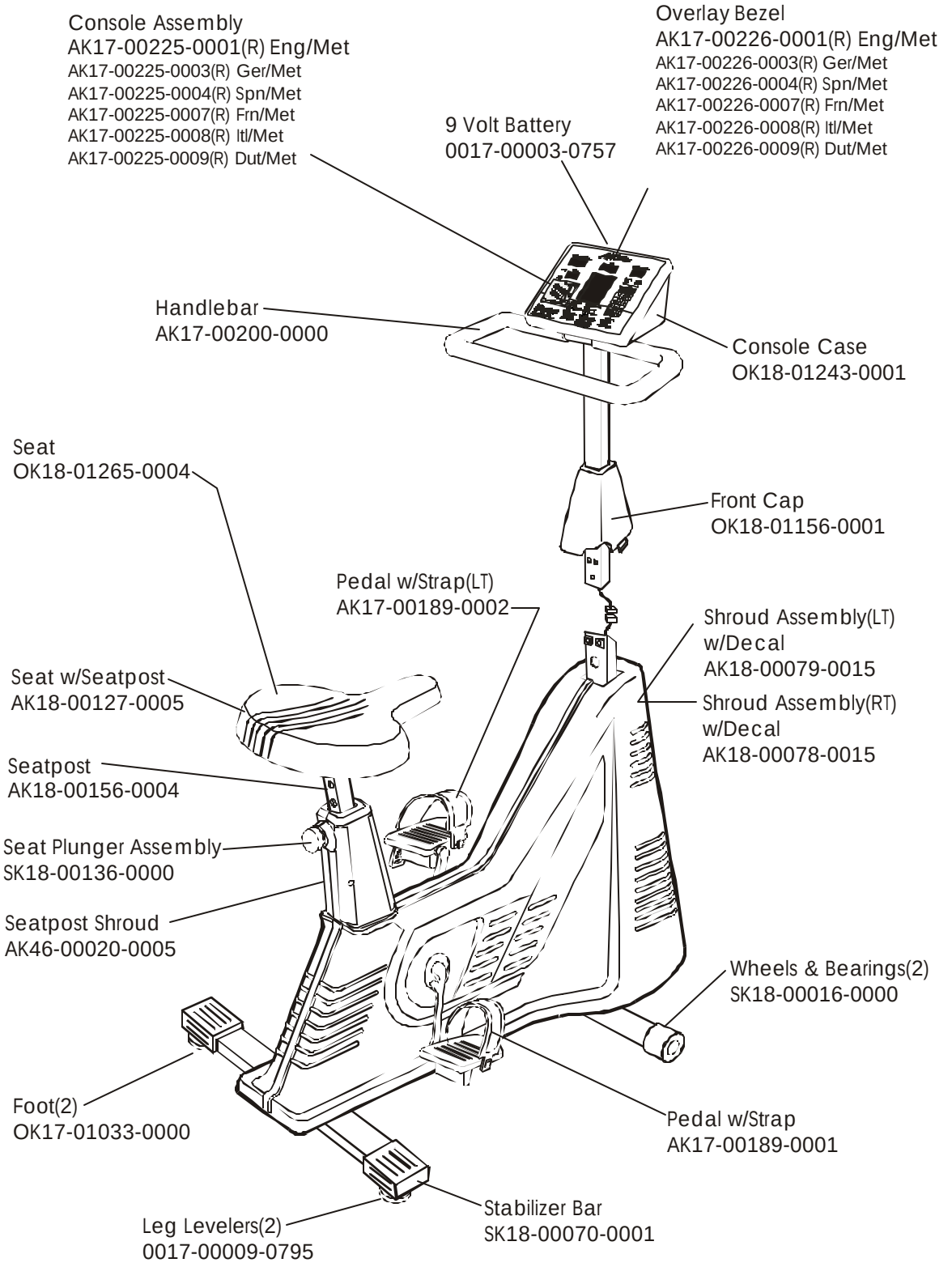

Revision Date: 9/24/01

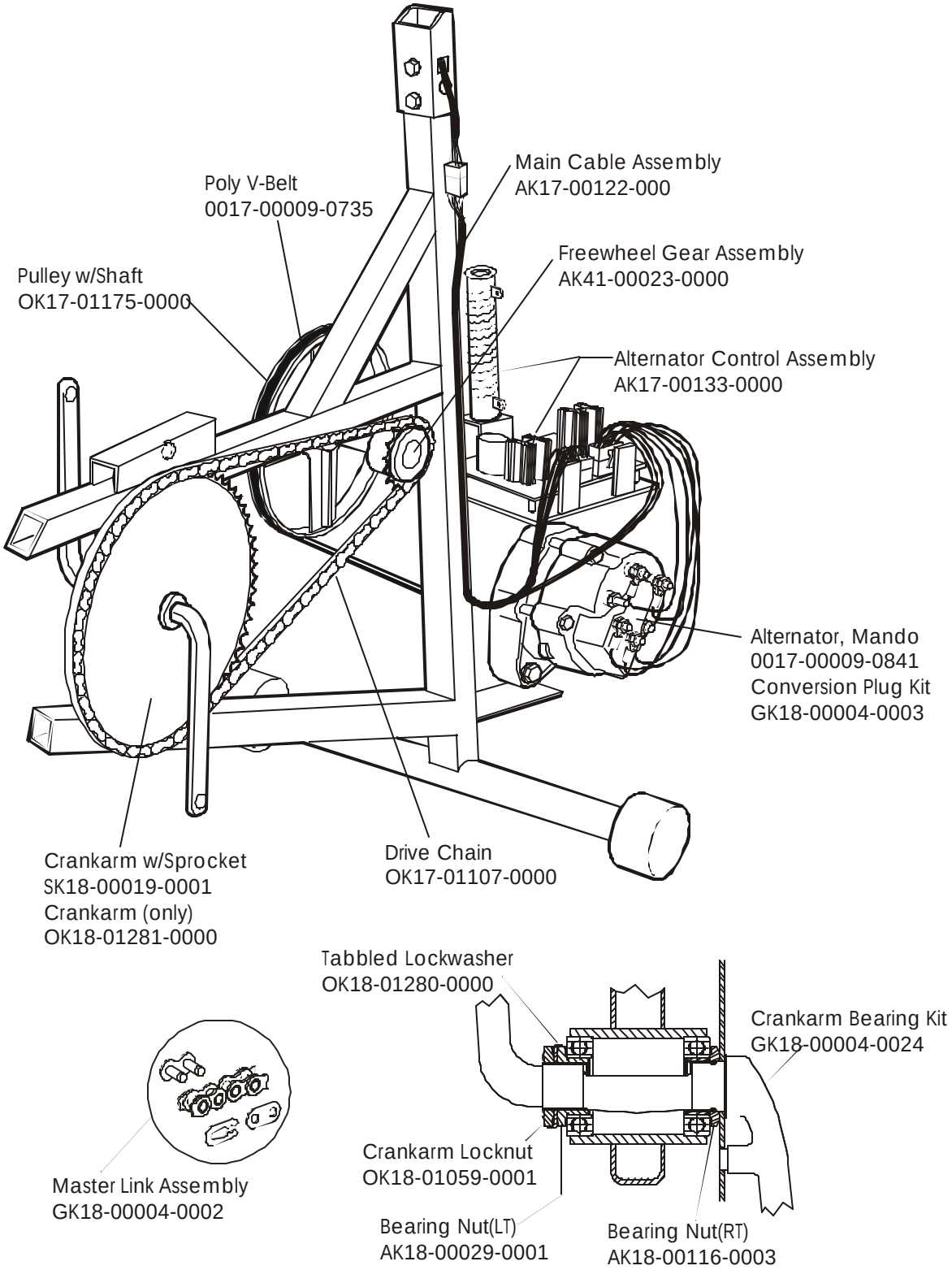
Main Cable Assembly
AK17-00122-000
Poly V-Belt
0017-00009-0735
Freewheel Gear Assembly
AK41-00023-0000
Pulley w/Shaft
OK17-01175-0000
Alternator Control Assembly
AK17-00133-0000
Alternator, Mando
0017-00009-0841
Conversion Plug Kit
GK18-00004-0003
Crankarm w/Sprocket
SK18-00019-0001
Crankarm (only)
OK18-01281-0000
Drive Chain
OK17-01107-0000
Tabbled Lockwasher
OK18-01280-0000
Crankarm Bearing Kit
GK18-00004-0024
Crankarm Locknut
OK18-01059-0001
Master Link Assembly
GK18-00004-0002
Bearing Nut(LT)
AK18-00029-0001
Bearing Nut(RT)
AK18-00116-0003