LC-8500HR EXERCISE BIKE

END OF LIFE

GE09-00025-XXXX

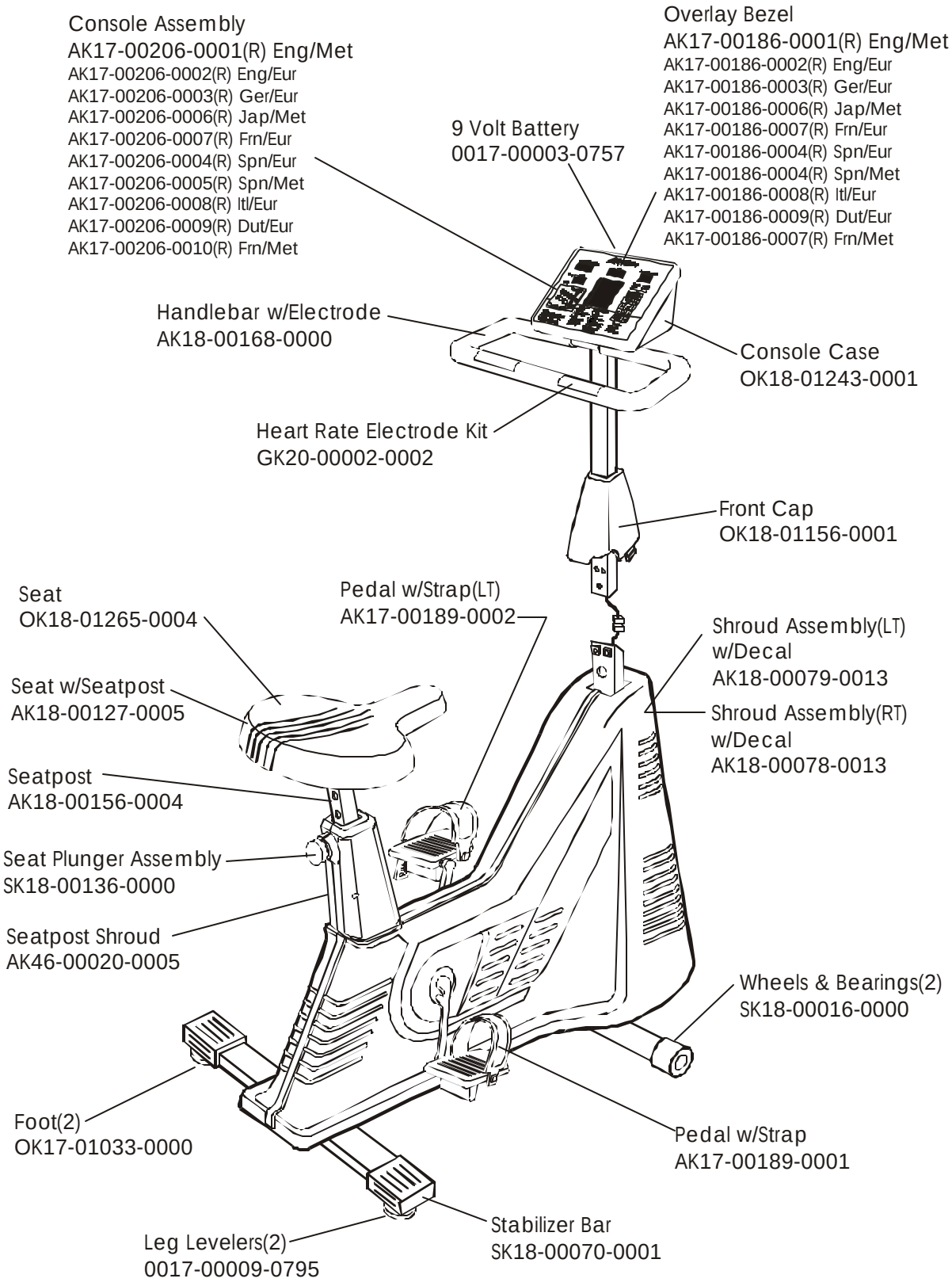

Revision Date: 12/22/00

LC-8500HR
EXERCISE BIKE

GE09-00025-XXXX

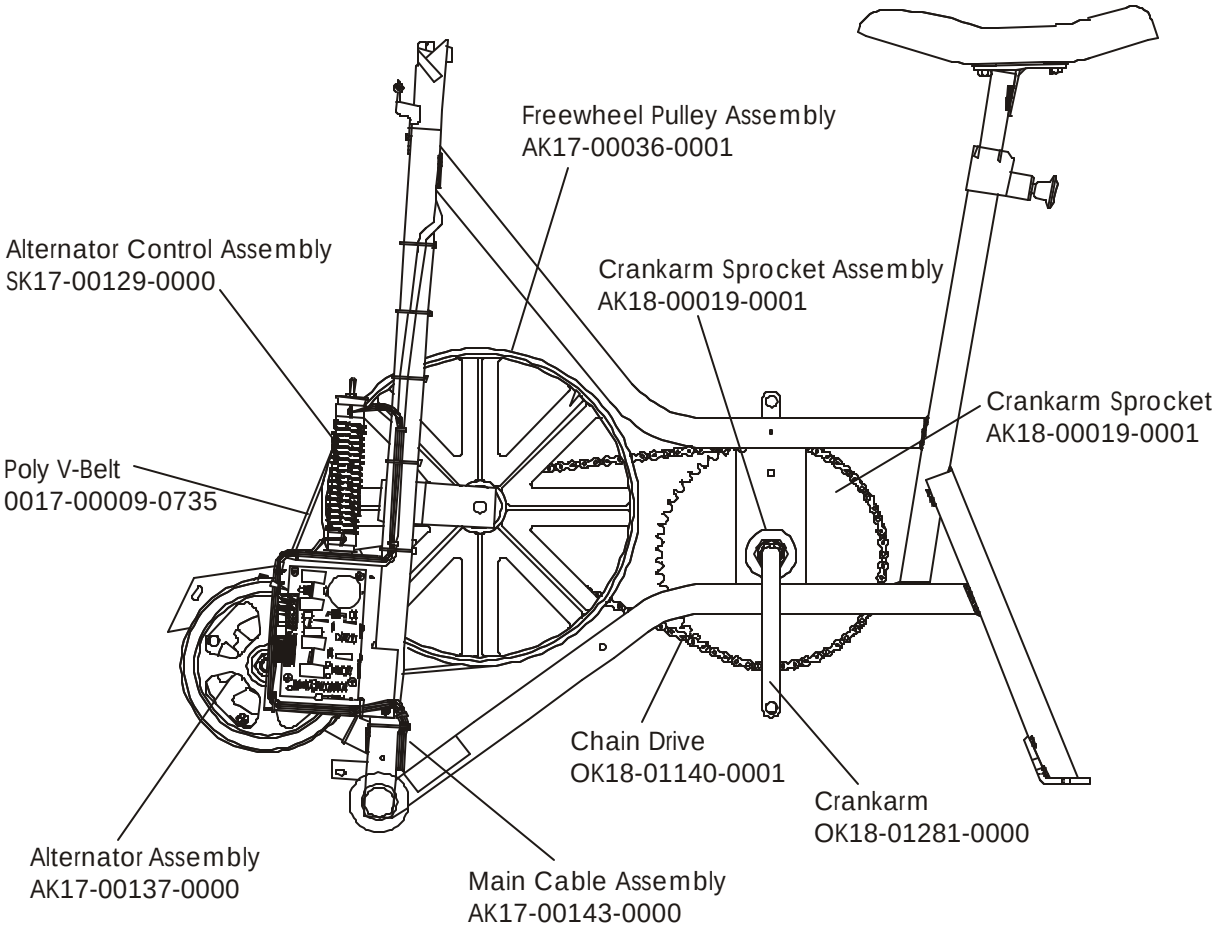

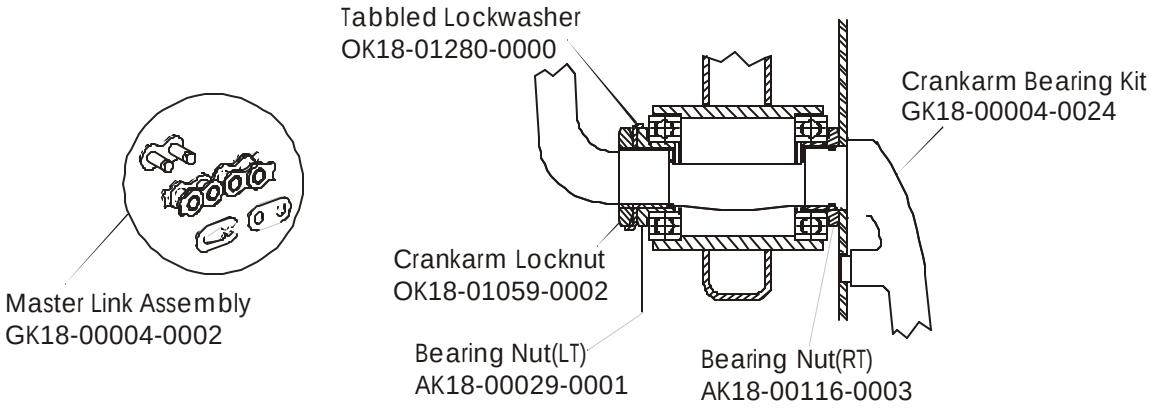

Revision Date: 12/22/00