LC-9100 (BELT) EXCERCISE

GK49-00007-0000

END OF LIFE

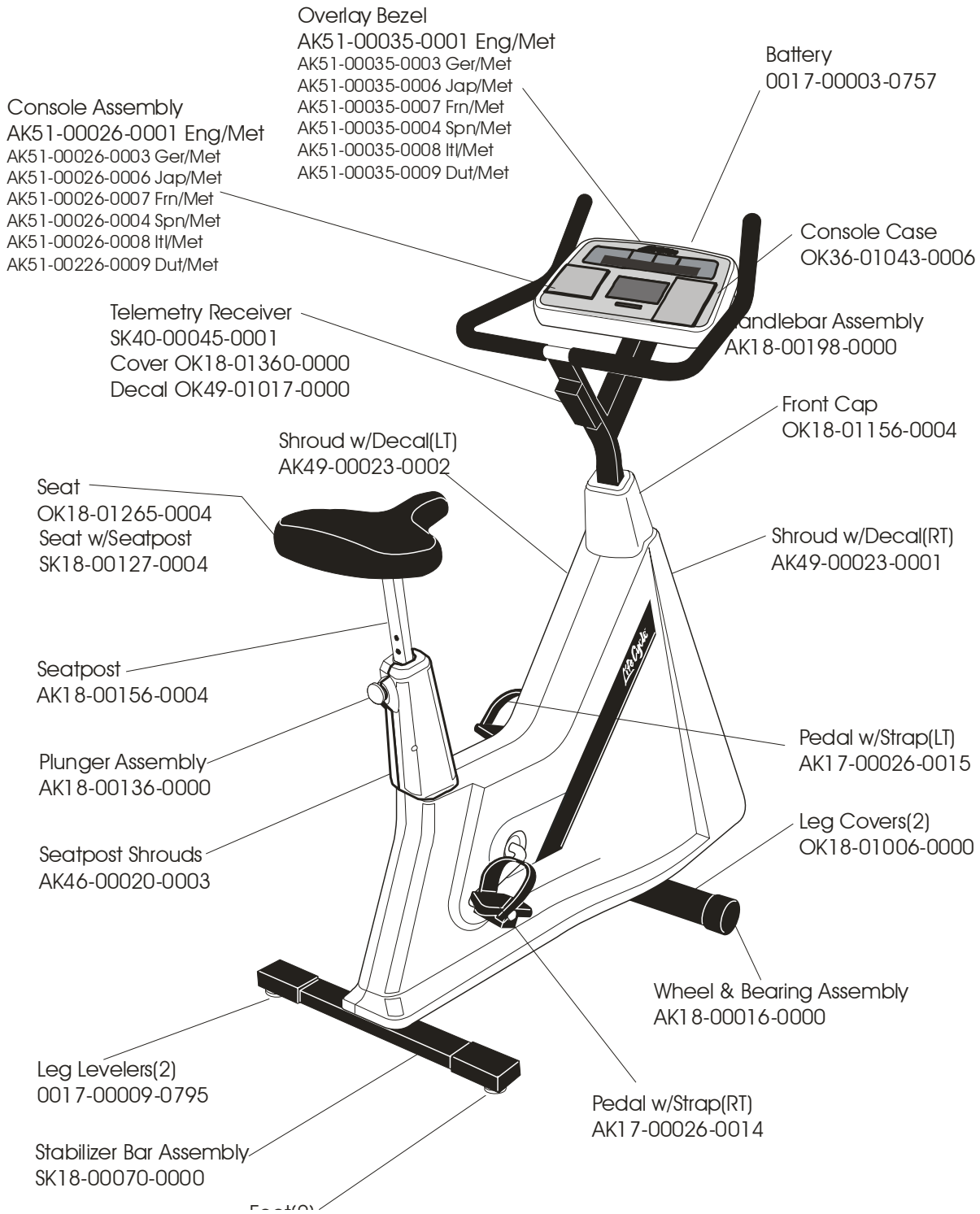

rev. 02 Apr 2007

LC-9100 (BELT)
EXCERCISE
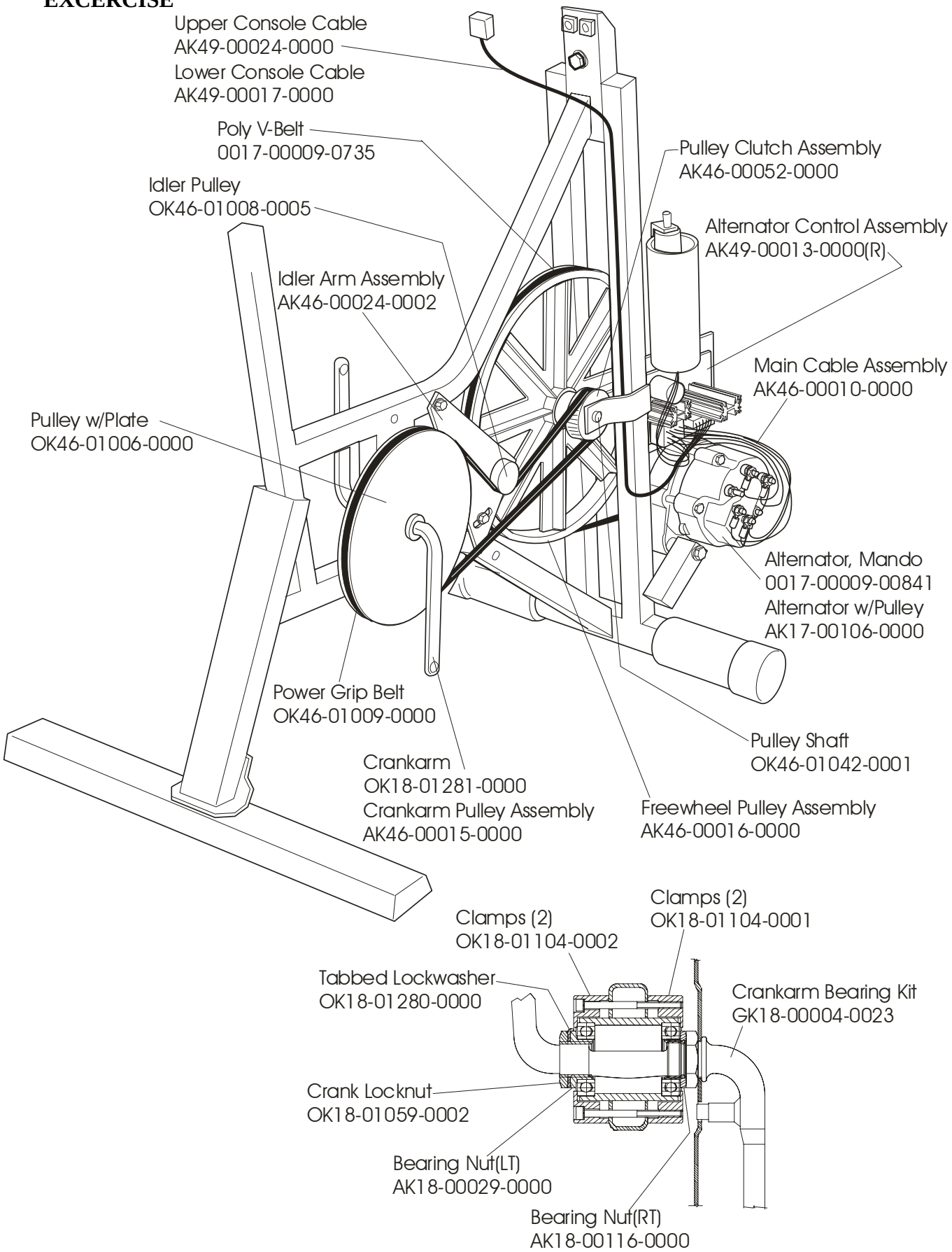
GK49-00007-0000