END OF LIFE

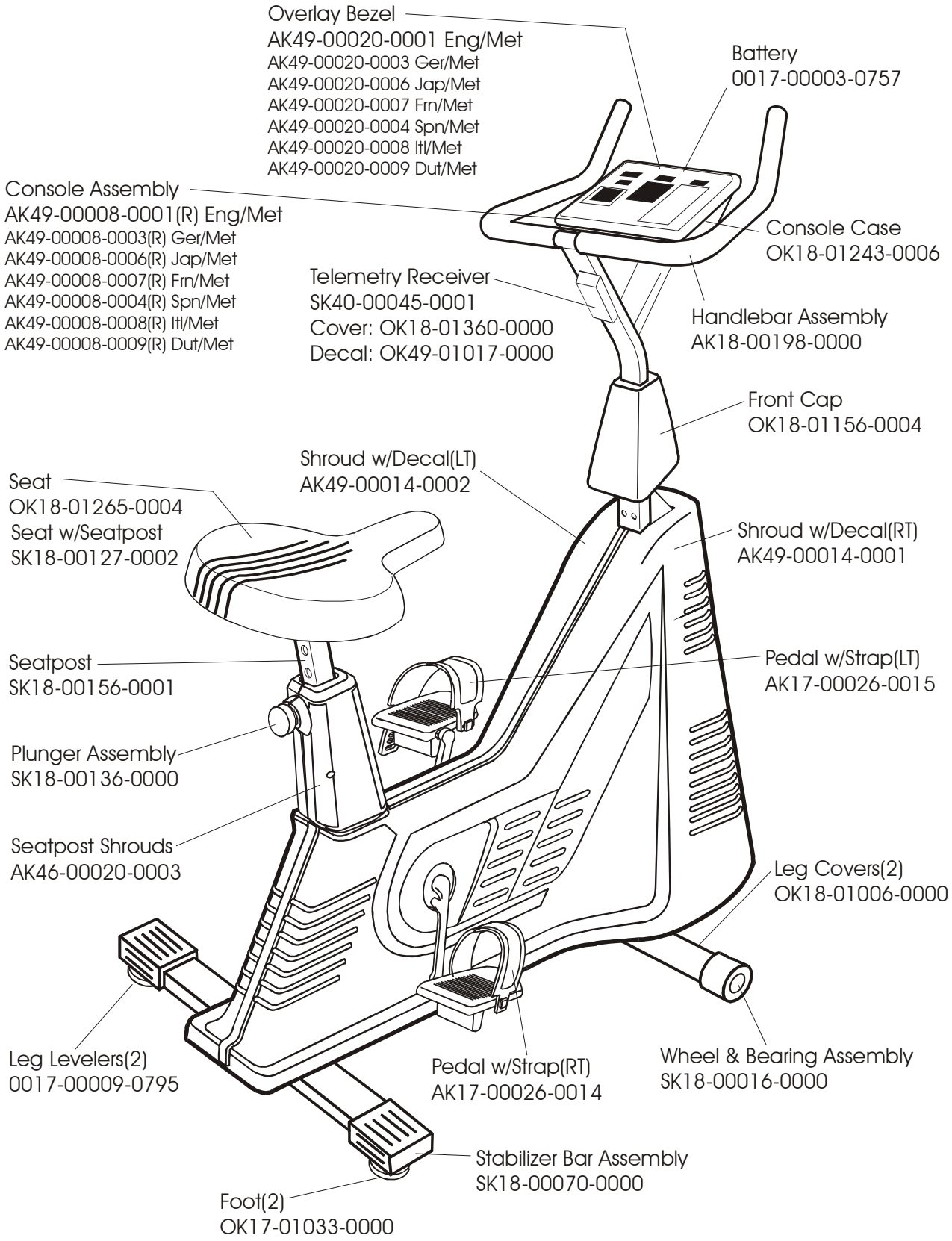
Overlay Bezel
AK49-00020-0001 Eng/Met
AK49-00020-0003 Ger/Met
AK49-00020-0006 Jap/Met
AK49-00020-0007 Frn/Met
AK49-00020-0004 Spn/Met
AK49-00020-0008 Itl/Met
AK49-00020-0009 Dut/Met
Battery
0017-00003-0757
Console Assembly
AK49-00008-0001(R) Eng/Met
AK49-00008-0003(R) Ger/Met
AK49-00008-0006(R) Jap/Met
AK49-00008-0007(R) Frn/Met
AK49-00008-0004(R) Spn/Met
AK49-00008-0008(R) Itl/Met
AK49-00008-0009(R) Dut/Met
Console Case
OK18-01243-0006
Telemetry Receiver
SK40-00045-0001
Cover: OK18-01360-0000
Decal: OK49-01017-0000
Handlebar Assembly
AK18-00198-0000
Front Cap
OK18-01156-0004
Shroud w/Decal(LT)
AK49-00014-0002
Seat
OK18-01265-0004
Seat w/Seatpost
SK18-00127-0002
Shroud w/Decal(RT)
AK49-00014-0001
Seatpost
SK18-00156-0001
Pedal w/Strap(LT)
AK17-00026-0015
Plunger Assembly
SK18-00136-0000
Seatpost Shrouds
AK46-00020-0003
Leg Covers(2)
OK18-01006-0000
Leg Levelers(2)
0017-00009-0795
Pedal w/Strap(RT)
AK17-00026-0014
Wheel & Bearing Assembly
SK18-00016-0000
Stabilizer Bar Assembly
SK18-00070-0000
Foot(2)
OK17-01033-0000

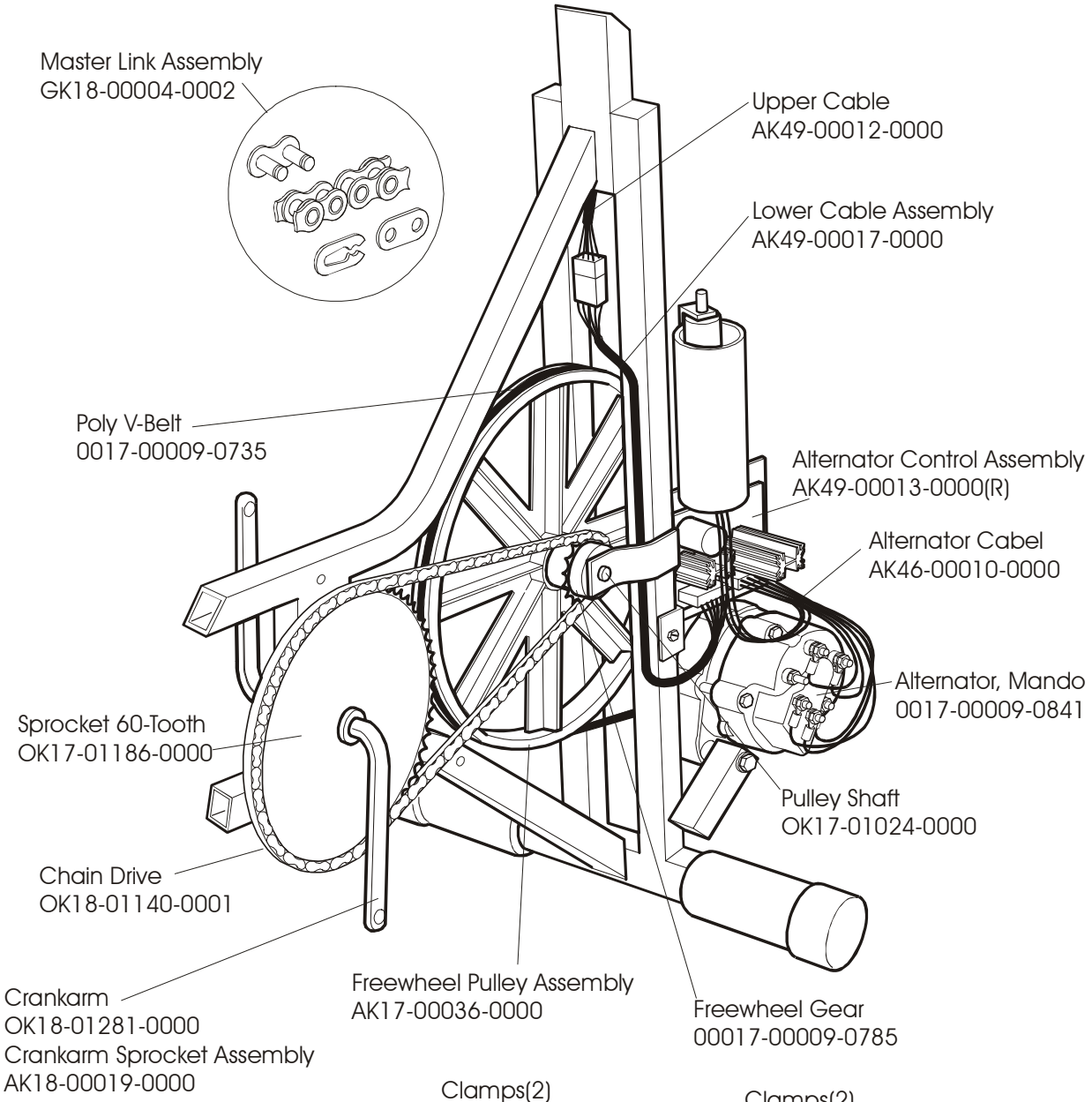
Master Link Assembly
GK18-00004-0002
Upper Cable
AK49-00012-0000
Lower Cable Assembly
AK49-00017-0000
Poly V-Belt
0017-00009-0735
Alternator Control Assembly
AK49-00013-0000(R)
Alternator Cabel
AK46-00010-0000
Alternator, Mando
0017-00009-0841
Sprocket 60-Tooth
OK17-01186-0000
Pulley Shaft
OK17-01024-0000
Chain Drive
OK18-01140-0001
Crankarm
OK18-01281-0000
Crankarm Sprocket Assembly
AK18-00019-0000
Freewheel Pulley Assembly
AK17-00036-0000
Freewheel Gear
00017-00009-0785

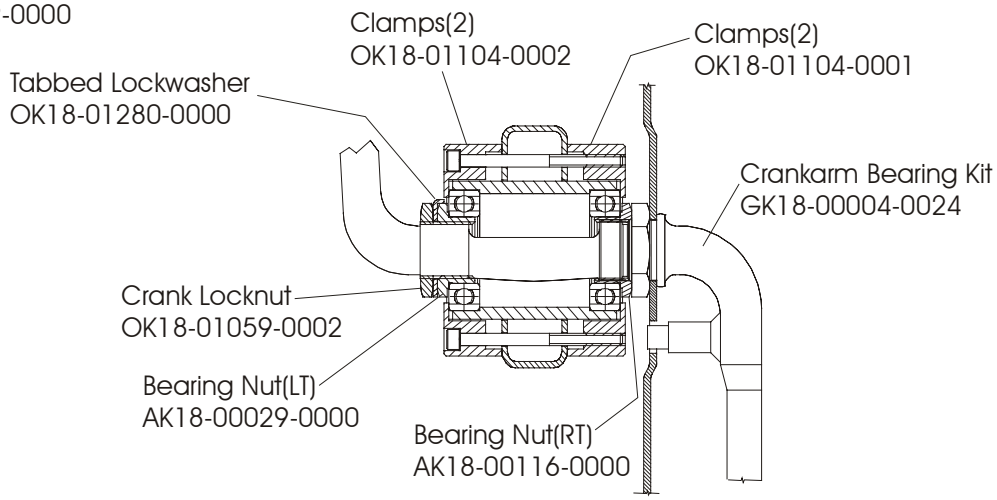
Clamps(2)
OK18-01104-0002
Clamps(2)
OK18-01104-0001
Tabbed Lockwasher
OK18-01280-0000
Crankarm Bearing Kit
GK18-00004-0024
Crank Locknut
OK18-01059-0002
Bearing Nut(LT)
AK18-00029-0000
Bearing Nut(RT)
AK18-00116-0000