END OF LIFE

LC-9500RHR (RE)
Exercise Bike

GK19-00014-XXXX

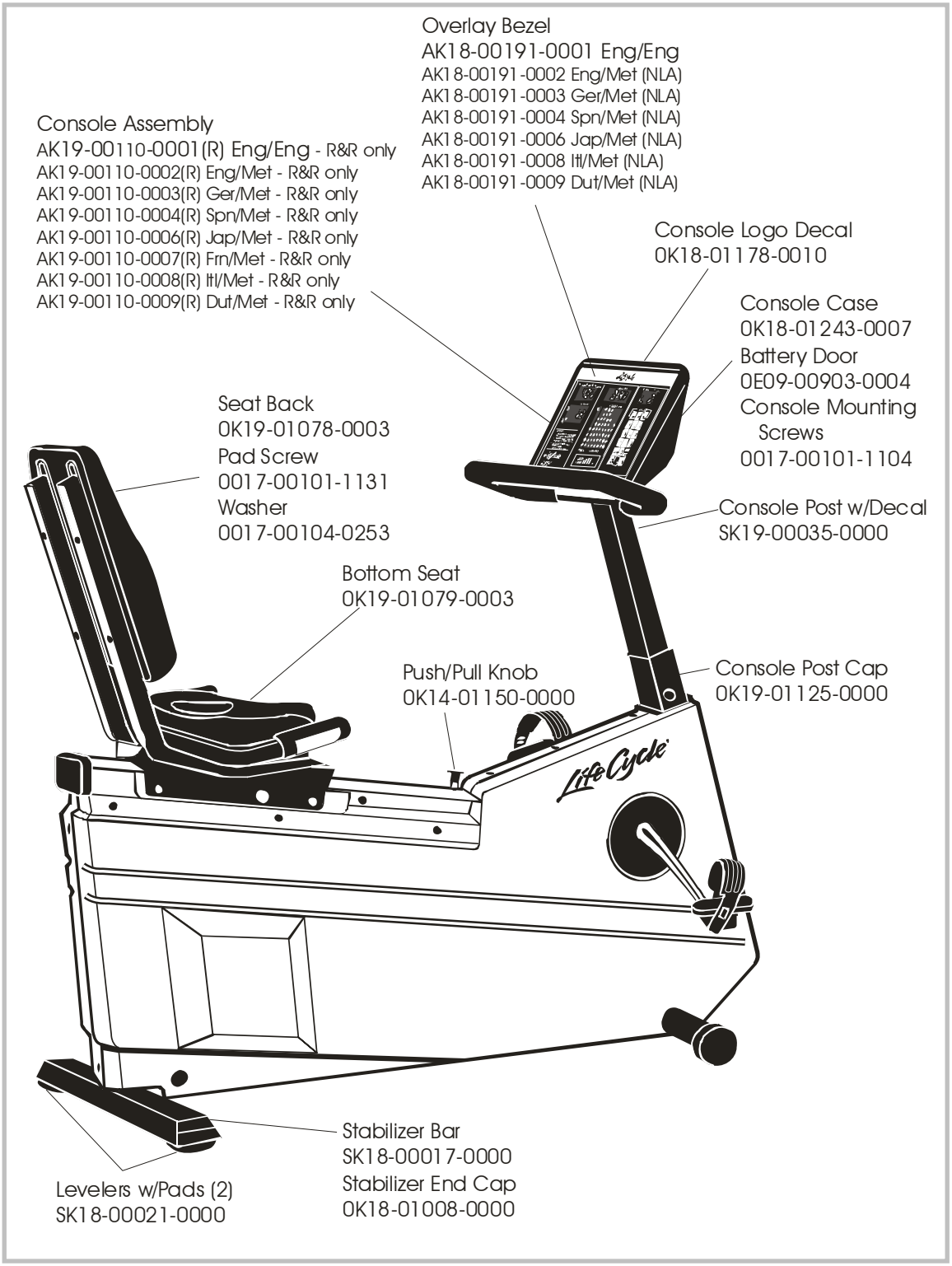

rev. 06/21/05

LC-9500RHR (RE) GK19-00014-XXXX
Exercise Bike

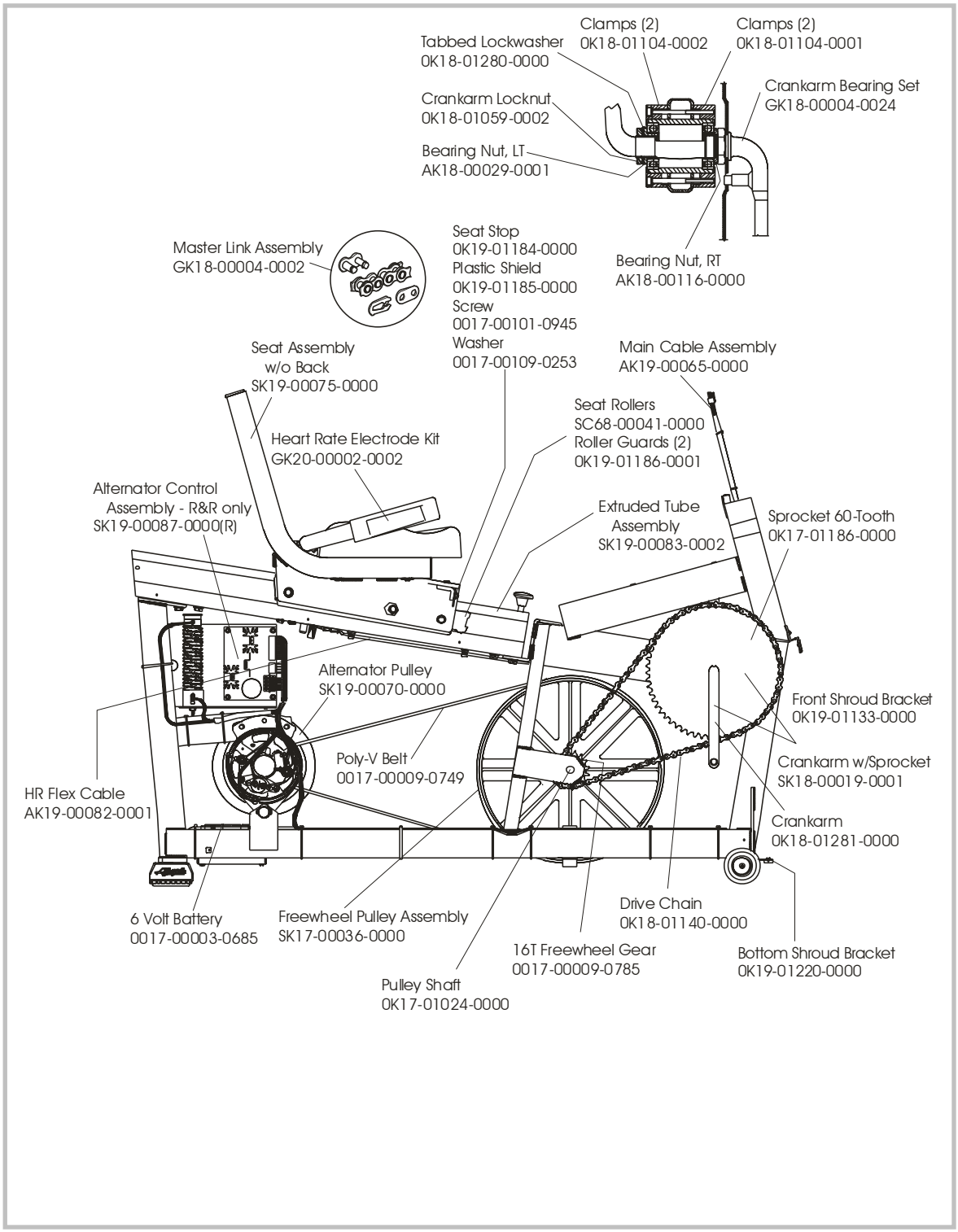

rev. 06/21/05

LC-9500RHR (RE) GK19-00014-XXXX
Exercise Bike

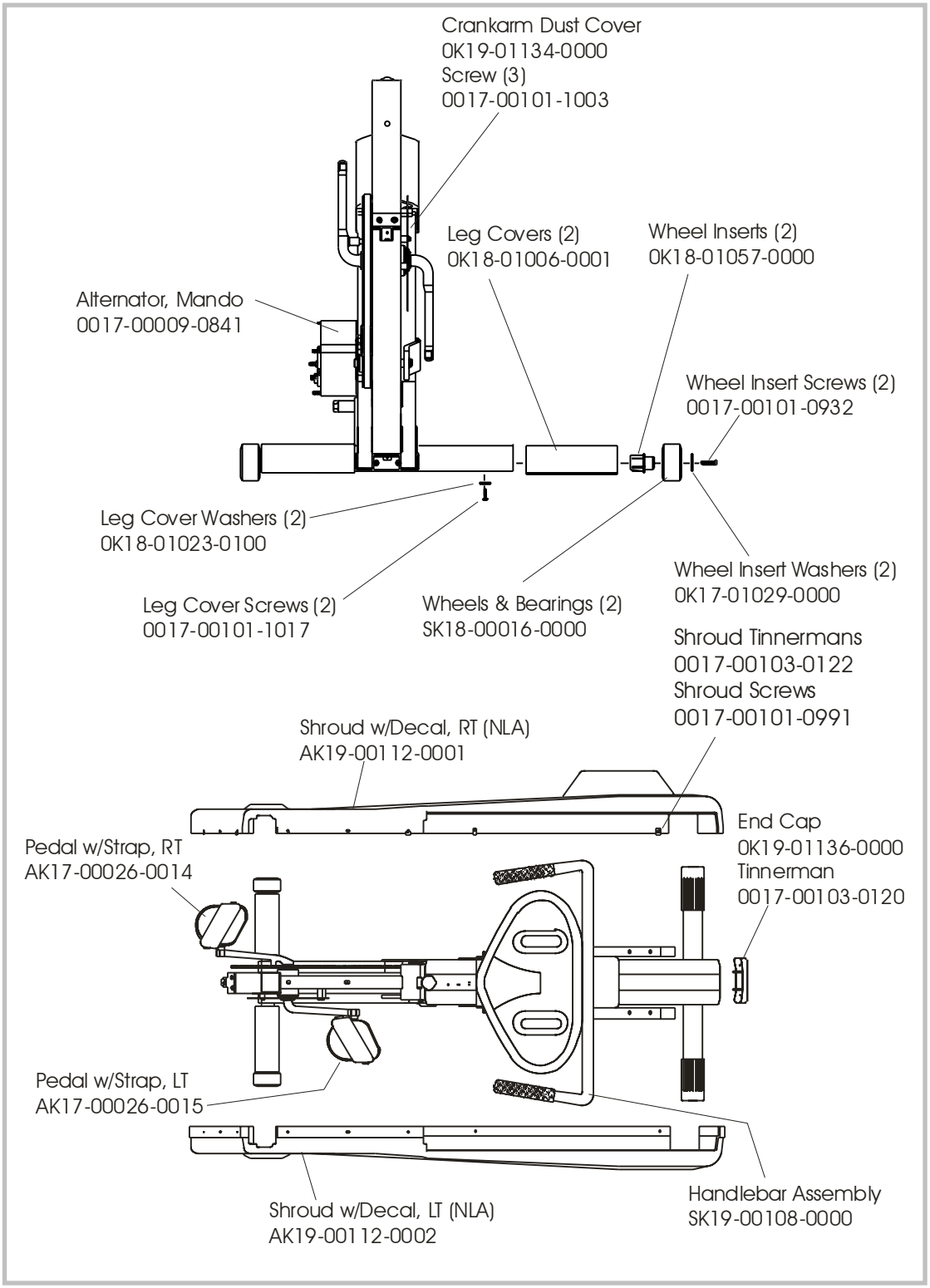

rev. 06/21/05