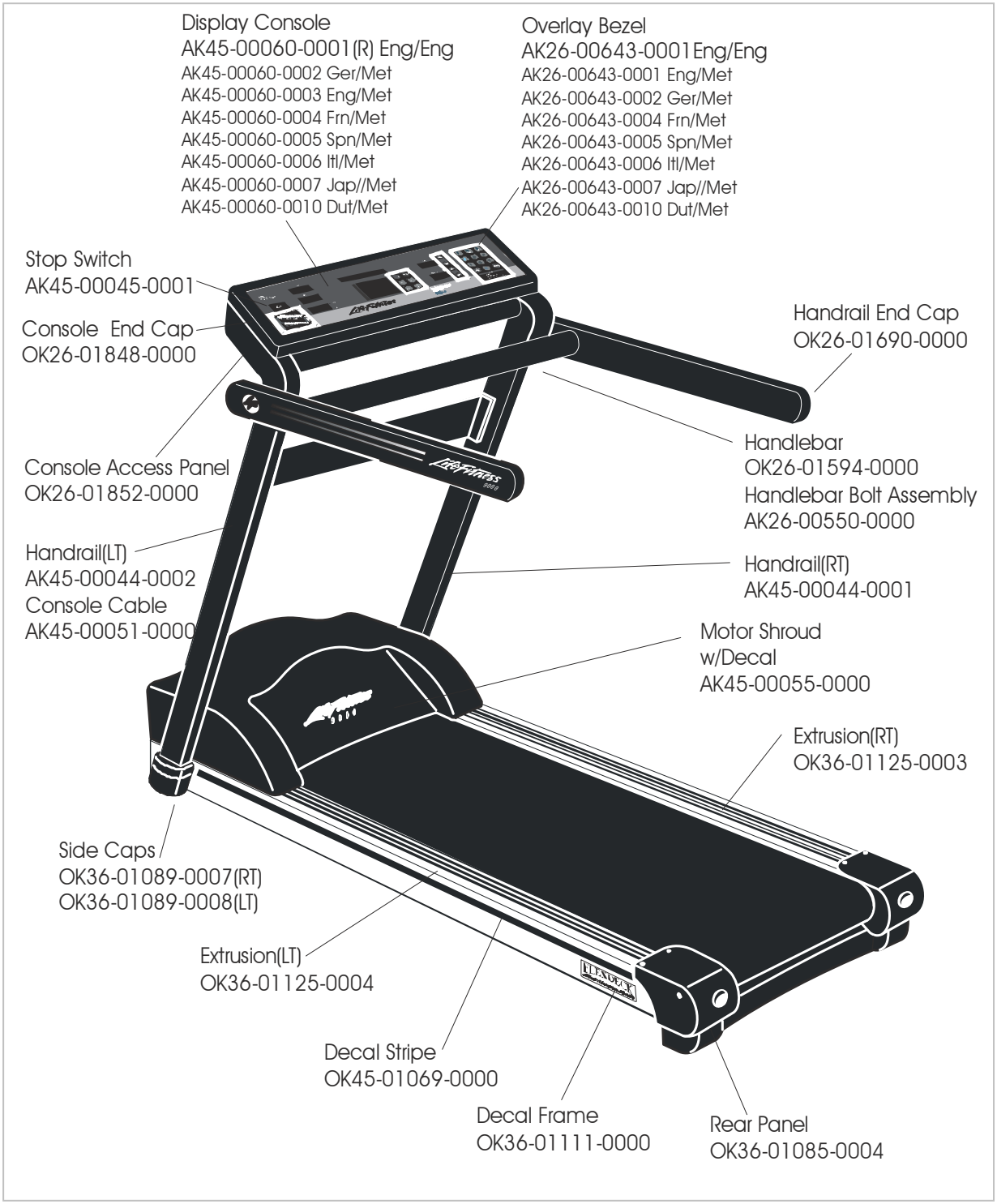
Display Console
AK45-00060-0001(R) Eng/Eng
AK45-00060-0002 Ger/Met
AK45-00060-0003 Eng/Met
AK45-00060-0004 Frn/Met
AK45-00060-0005 Spn/Met
AK45-00060-0006 Itl/Met
AK45-00060-0007 Jap//Met
AK45-00060-0010 Dut/Met
Overlay Bezel
AK26-00643-0001Eng/Eng
AK26-00643-0001 Eng/Met
AK26-00643-0002 Ger/Met
AK26-00643-0004 Frn/Met
AK26-00643-0005 Spn/Met
AK26-00643-0006 Itl/Met
AK26-00643-0007 Jap//Met
AK26-00643-0010 Dut/Met
Stop Switch
AK45-00045-0001
Console End Cap
OK26-01848-0000
Handrail End Cap
OK26-01690-0000
Handlebar
OK26-01594-0000
Handlebar Bolt Assembly
AK26-00550-0000
Console Access Panel
OK26-01852-0000
Handrail(LT)
AK45-00044-0002
Console Cable
AK45-00051-0000
Handrail(RT)
AK45-00044-0001
Motor Shroud
w/Decal
AK45-00055-0000
Extrusion(RT)
OK36-01125-0003
Side Caps
OK36-01089-0007(RT)
OK36-01089-0008(LT)
Extrusion(LT)
OK36-01125-0004
Decal Stripe
OK45-01069-0000
Decal Frame
OK36-01111-0000
Rear Panel
OK36-01085-0004

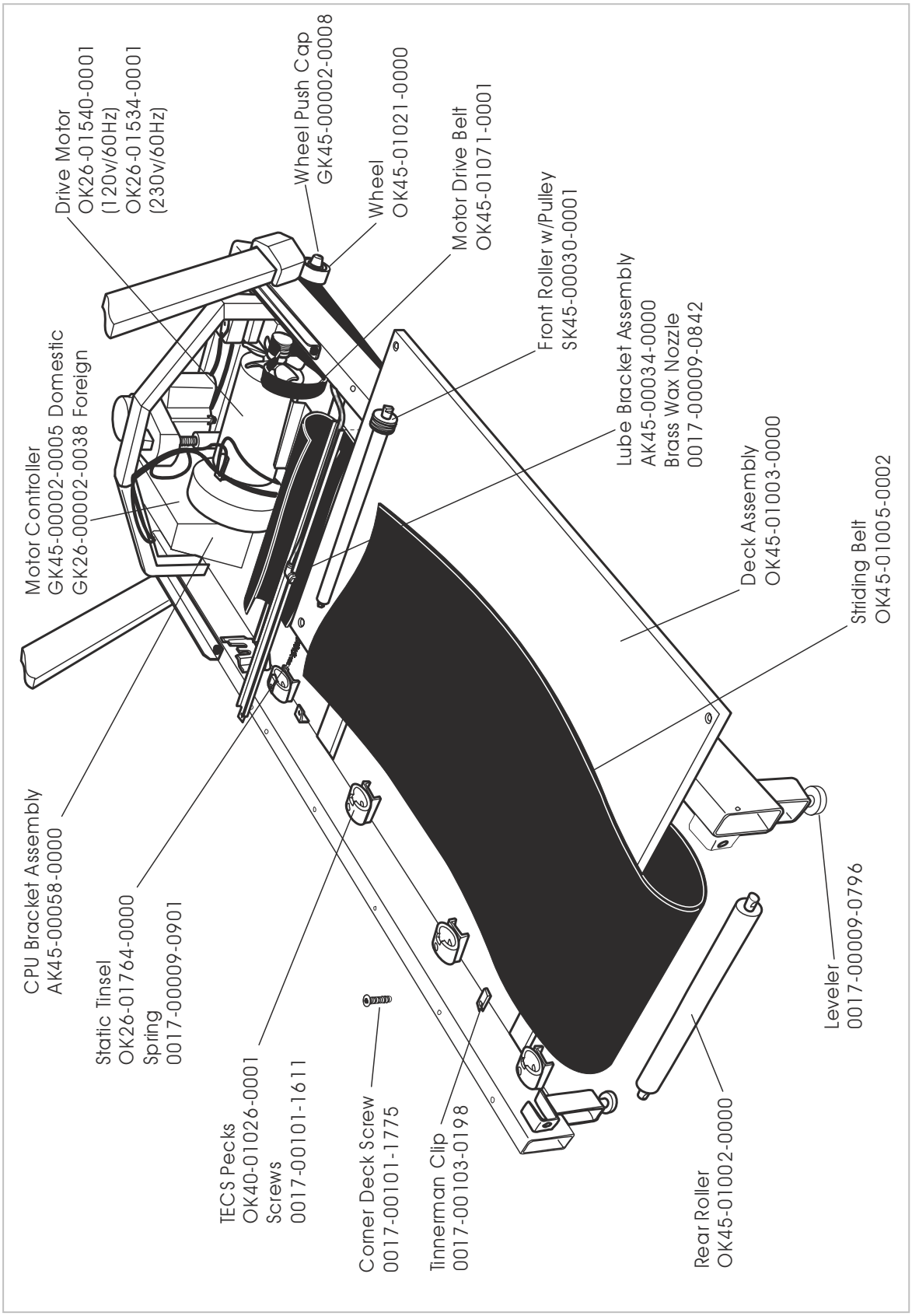
Drive Motor
OK26-01540-0001
(120v/60Hz)
OK26-01534-0001
(230v/60Hz)
Wheel Push Cap
GK45-00002-0008
Wheel
OK45-01021-0000
Motor Drive Belt
OK45-01071-0001
Front Roller w/Pulley
SK45-00030-0001
Lube Bracket Assembly
AK45-00034-0000
Brass Wax Nozzle
0017-00009-0842
Deck Assembly
OK45-01003-0000
Striding Belt
OK45-01005-0002
Motor Controller
GK45-00002-0005 Domestic
GK26-00002-0038 Foreign
CPU Bracket Assembly
AK45-00058-0000
Static Tinsel
OK26-01764-0000
Spring
0017-00009-0901
TECS Pecks
OK40-01026-0001
Screws
0017-00101-1611
Corner Deck Screw
0017-00101-1775
Tinnerman Clip
0017-00103-0198
Rear Roller
OK45-01002-0000
Leveler
0017-00009-0796

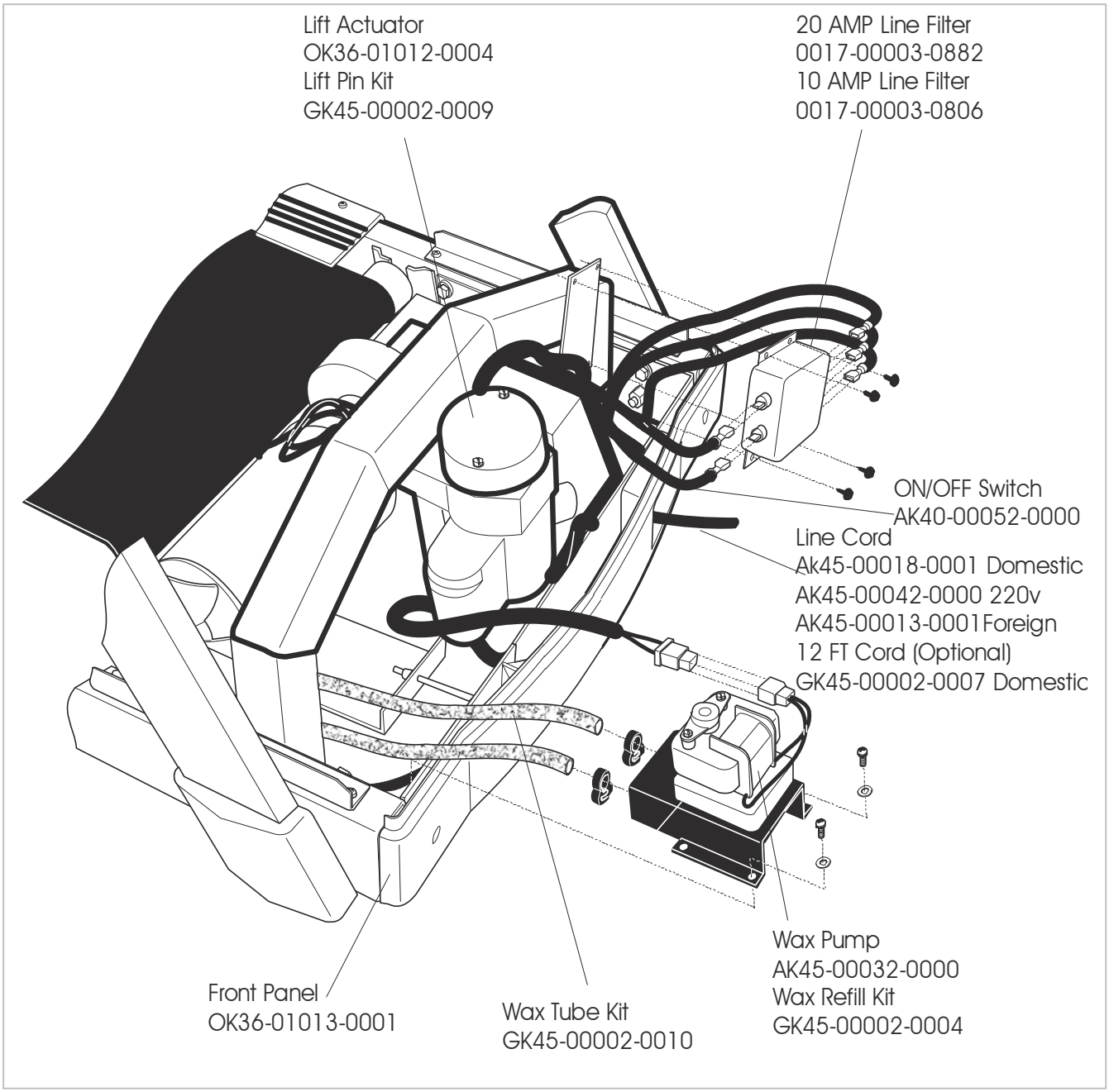
Lift Actuator
OK36-01012-0004
Lift Pin Kit
GK45-00002-0009
20 AMP Line Filter
0017-00003-0882
10 AMP Line Filter
0017-00003-0806
ON/OFF Switch
AK40-00052-0000
Line Cord
Ak45-00018-0001 Domestic
AK45-00042-0000 220v
AK45-00013-0001Foreign
12 FT Cord (Optional)
GK45-00002-0007 Domestic
Wax Pump
AK45-00032-0000
Wax Refill Kit
GK45-00002-0004
Front Panel
OK36-01013-0001
Wax Tube Kit
GK45-00002-0010