TR-9000
Treadmill

END OF LIFE

GK45-00009-XXXX
SN 341200 & up

rev 07 Nov 2007

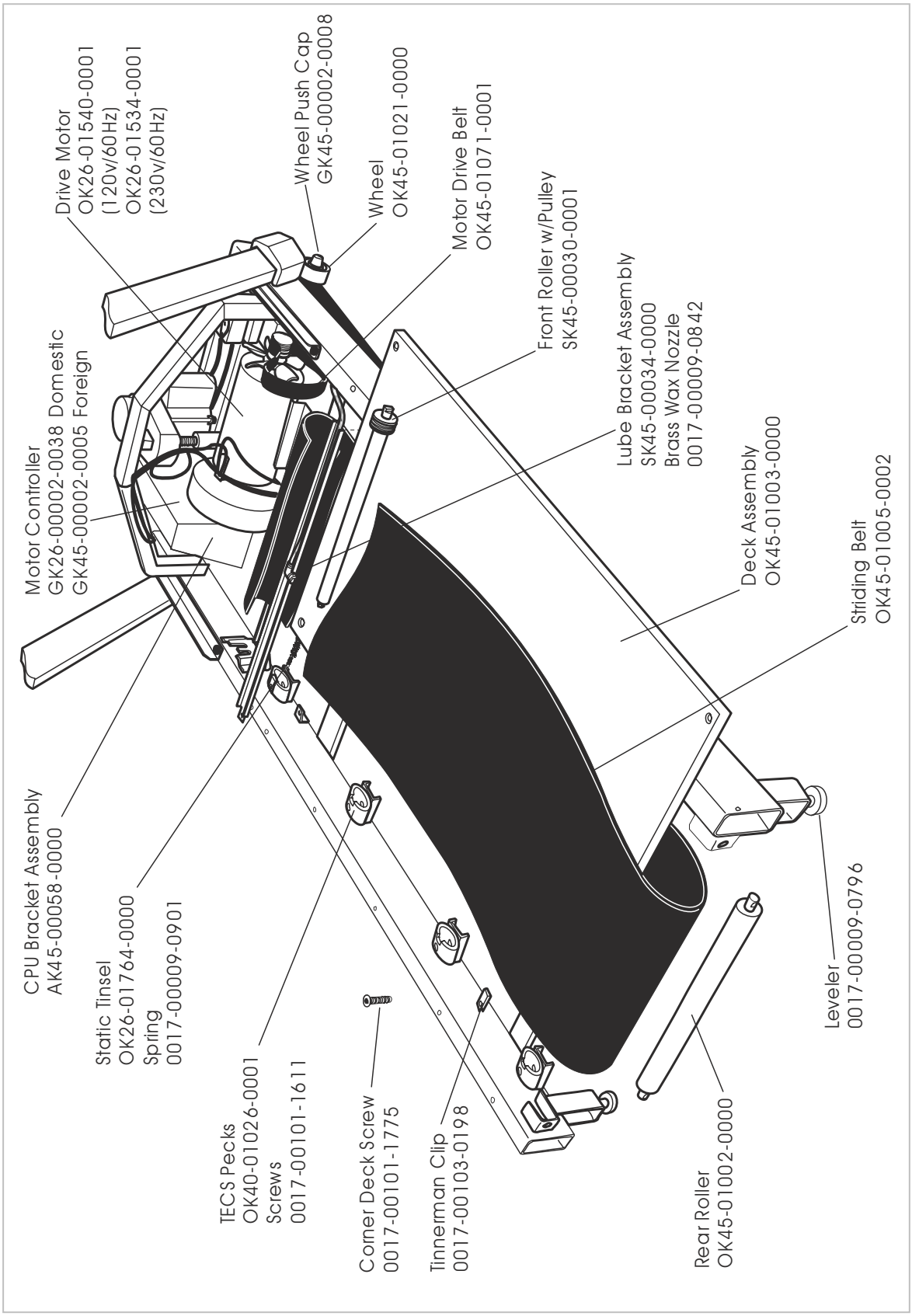
Drive Motor
OK26-01540-0001
(120v/60Hz)
OK26-01534-0001
(230v/60Hz)
Wheel Push Cap
GK45-00002-0008
Wheel
OK45-01021-0000
Motor Drive Belt
OK45-01071-0001
Front Roller w/Pulley
SK45-00030-0001
Lube Bracket Assembly
SK45-00034-0000
Brass Wax Nozzle
0017-00009-0842
Deck Assembly
OK45-01003-0000
Striding Belt
OK45-01005-0002
Motor Controller
GK26-00002-0038 Domestic
GK45-00002-0005 Foreign
CPU Bracket Assembly
AK45-00058-0000
Static Tinsel
OK26-01764-0000
Spring
0017-00009-0901
TECS Pecks
OK40-01026-0001
Screws
0017-00101-1611
Corner Deck Screw
0017-00101-1775
Tinnerman Clip
0017-00103-0198
Rear Roller
OK45-01002-0000
Leveler
0017-00009-0796

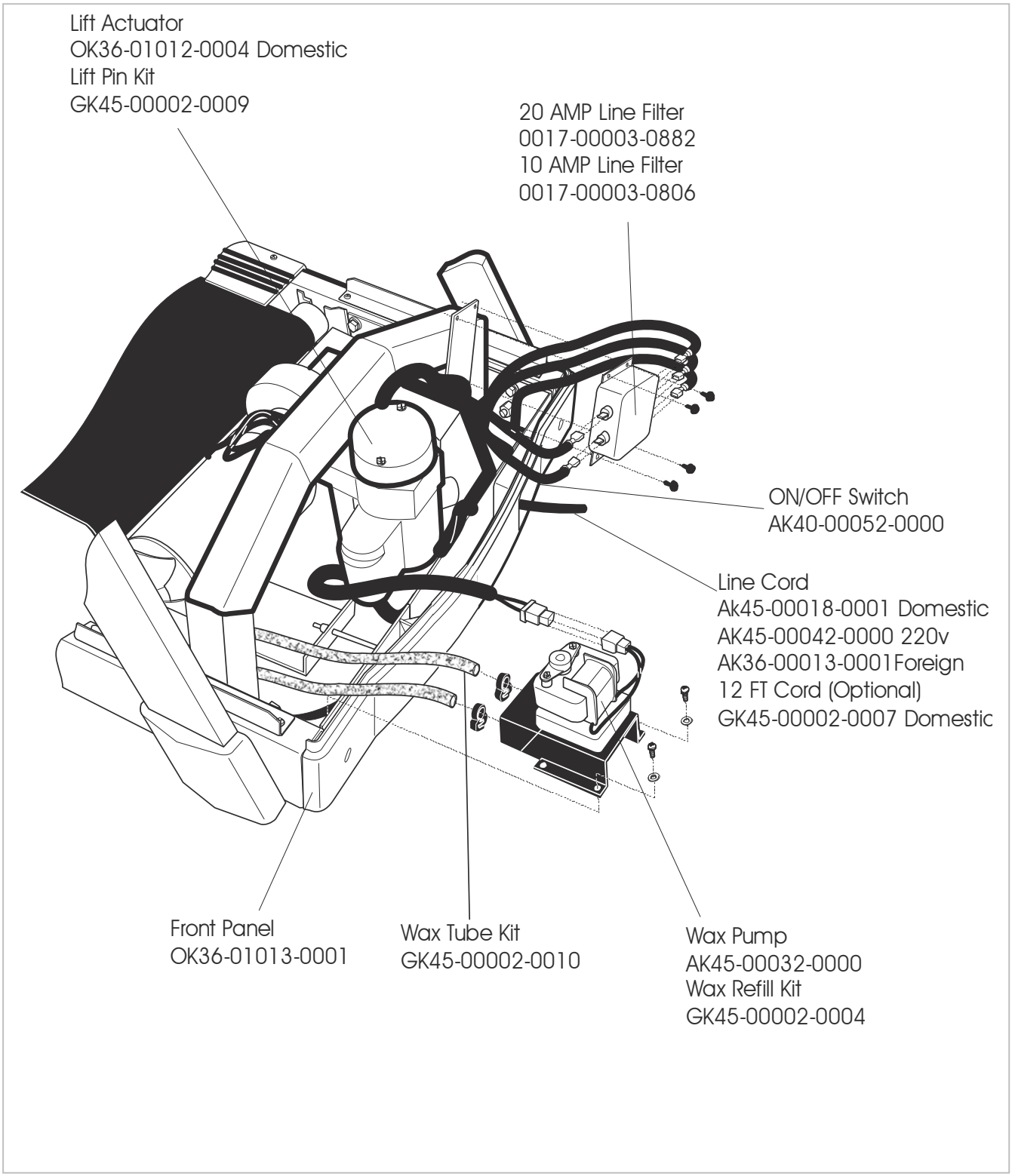
Lift Actuator
OK36-01012-0004 Domestic
Lift Pin Kit
GK45-00002-0009
20 AMP Line Filter
0017-00003-0882
10 AMP Line Filter
0017-00003-0806
ON/OFF Switch
AK40-00052-0000
Line Cord
Ak45-00018-0001 Domestic
AK45-00042-0000 220v
AK36-00013-0001Foreign
12 FT Cord (Optional)
GK45-00002-0007 Domestic
Front Panel
OK36-01013-0001
Wax Tube Kit
GK45-00002-0010
Wax Pump
AK45-00032-0000
Wax Refill Kit
GK45-00002-0004