THE INFORMATION CONTAINED IN THIS DRAWING IS THE SOLE PROPERTY OF OCTANE FITNESS. ANY REPRODUCTION IN PART OR WHOLE WITHOUT THE WRITTEN PERMISSION OF OCTANE FITNESS IS PROHIBITED.

| REV | DESCRIPTION | ECO # | DATE | ENG |
|---|---|---|---|---|
| - | See Sheet1 | - | - | - |

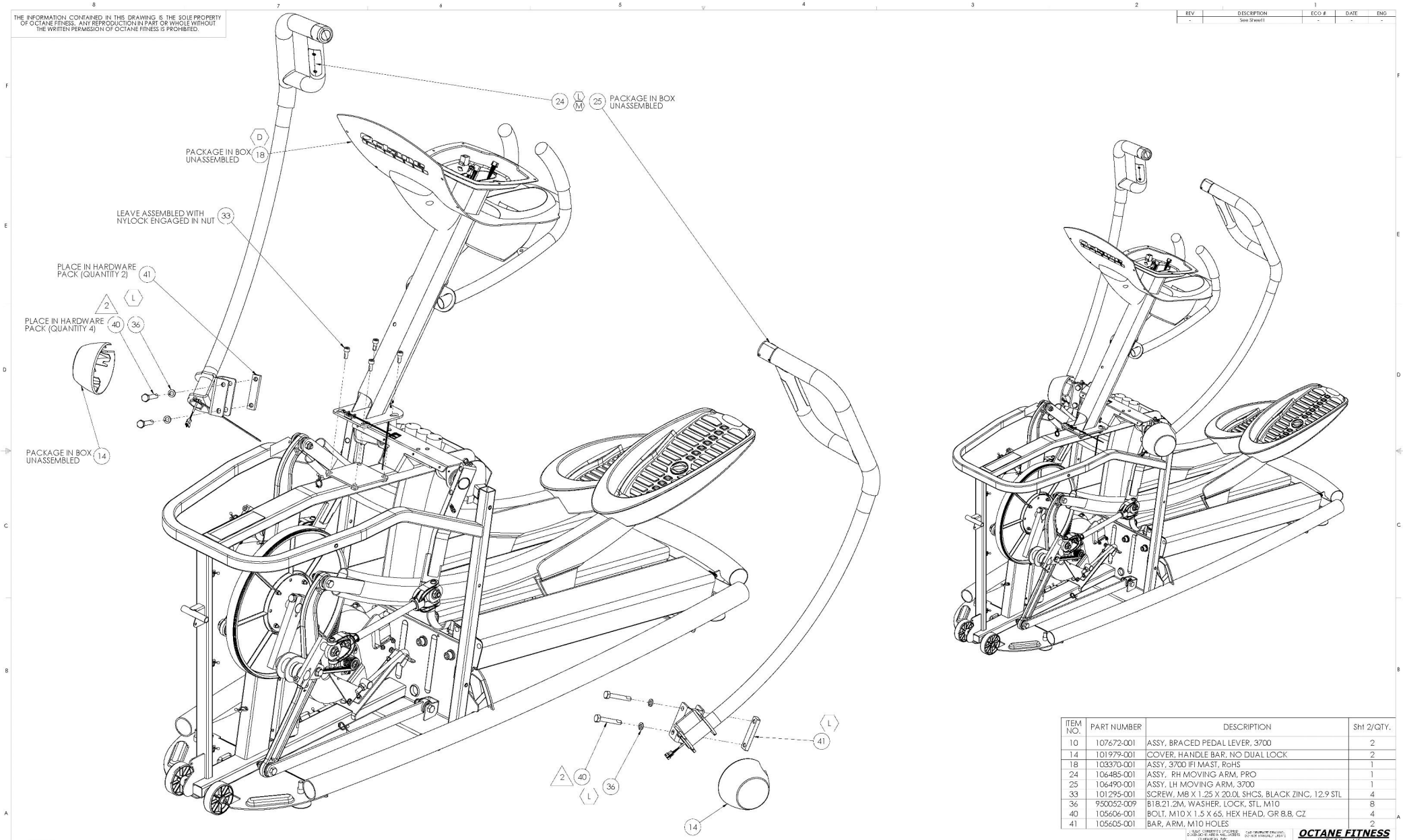


| ITEM NO. | PART NUMBER | DESCRIPTION | Sht 2/QTY. |
|---|---|---|---|
| 10 | 107672-001 | ASSY, BRACED PEDAL LEVER, 3700 | 2 |
| 14 | 101979-001 | COVER, HANDLE BAR, NO DUAL LOCK | 2 |
| 18 | 103370-001 | ASSY, 3700 IFI MAST, RoHS | 1 |
| 24 | 106485-001 | ASSY, RH MOVING ARM, PRO | 1 |
| 25 | 106490-001 | ASSY, LH MOVING ARM, 3700 | 1 |
| 33 | 101295-001 | SCREW, M8 X 1.25 X 20.0L SHCS, BLACK ZINC, 12.9 STL | 4 |
| 36 | 950052-009 | B18.21.2M, WASHER, LOCK, STL, M10 | 8 |
| 40 | 105606-001 | BOLT, M10 X 1.5 X 65, HEX HEAD, GR 8.8, CZ | 4 |
| 41 | 105605-001 | BAR, ARM, M10 HOLES | 2 |

NOTES:

1. TORQUE FASTENER TO 23 N-M (17 FT-LB)
2. TORQUE FASTENER TO 45 N-M (33 FT-LB)

**OCTANE FITNESS**
*Fuel Your Life*

DESCRIPTION
ASSEMBLY, PRO3700 BASE BOX, RoHS

| | | | |
|---|---|---|---|
| SEE NOTES | | XX-XX-XX | |
| SEE NOTES | | XX-XX-XX | |
| | | XX-XX-XX | |
| | | XX-XX-XX | |

DWG. NO. D 103042-001