THE INFORMATION CONTAINED IN THIS DRAWING IS THE SOLE PROPERTY OF OCTANE FITNESS. ANY REPRODUCTION IN PART OR WHOLE WITHOUT THE WRITTEN PERMISSION OF OCTANE FITNESS IS PROHIBITED.

| REV | DESCRIPTION | ECO # | DATE | ENG |
|---|---|---|---|---|
| - | See Sheet1 | - | - | - |

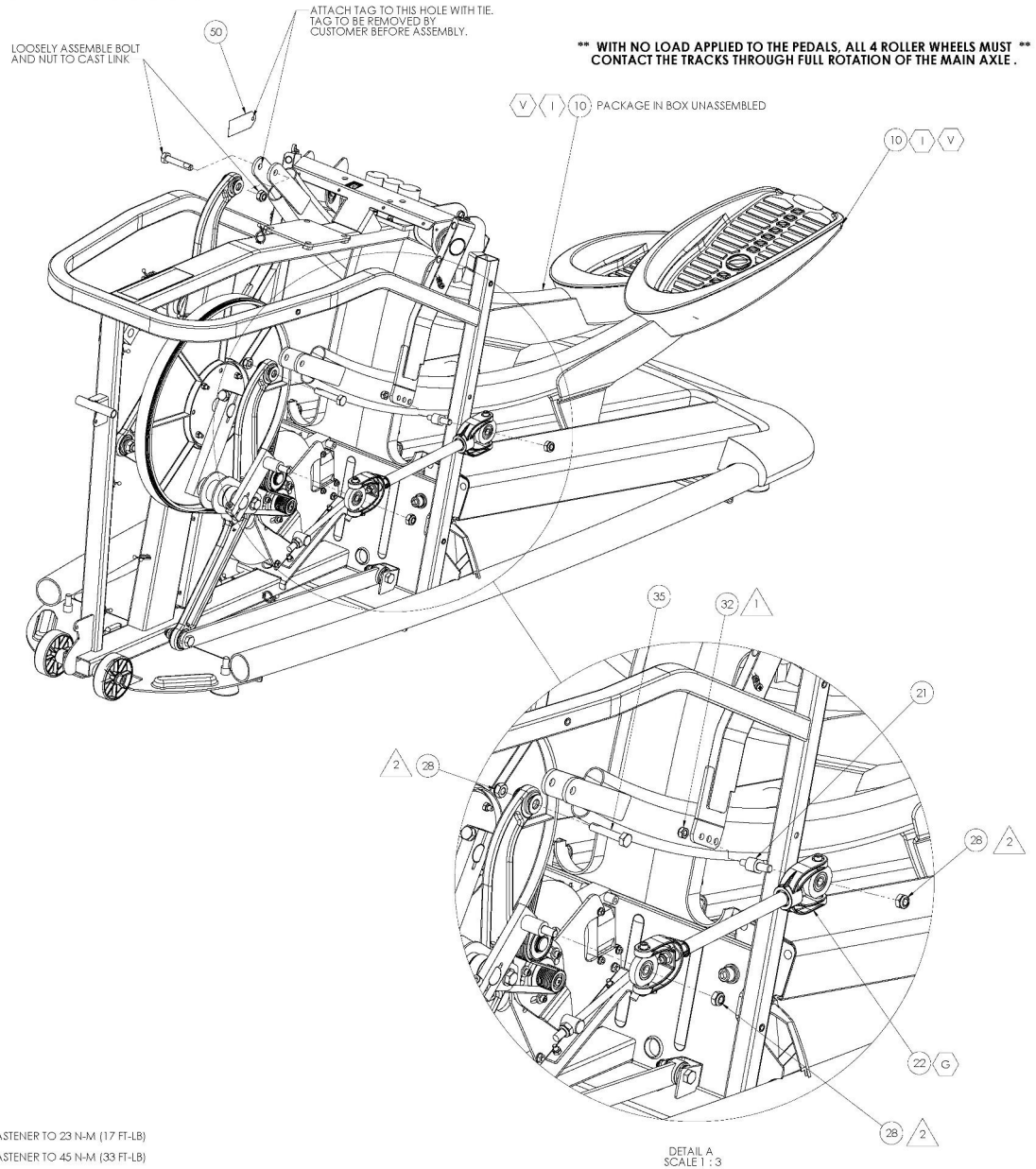


DETAIL A
SCALE 1 : 3

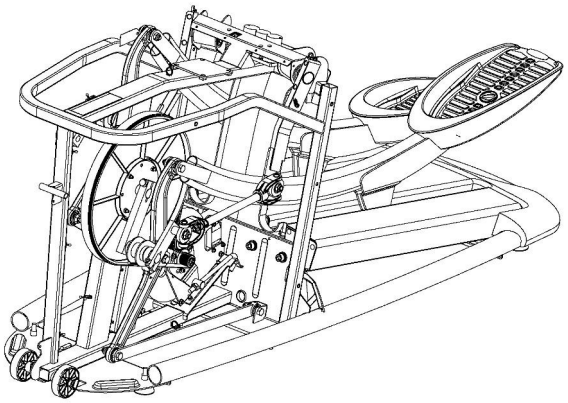

NOTES:

1. TORQUE FASTENER TO 23 N-M (17 FT-LB)
2. TORQUE FASTENER TO 45 N-M (33 FT-LB)

| ITEM NO. | PART NUMBER | DESCRIPTION | Sht 3/QTY. |
|---|---|---|---|
| 10 | 107672-001 | ASSY, BRACED PEDAL LEVER, 3700 | 2 |
| 21 | 102498-001 | SHAFT, ROCKER | 2 |
| 22 | 102710-001 | ASSEMBLY, MULTI-AXIS BEARING LINK, PLASTIC | 2 |
| 28 | 950046-009 | NUT, HEX. NYLON INSERT, STL, M10 | 10 |
| 32 | 950046-008 | NUT, HEX. NYLON INSERT, STL, M8 | 4 |
| 35 | 100715-001 | BOLT, M10 X 1.5 X 55, HEX HEAD, GR 8.8, CZ | 4 |
| 50 | 102286-001 | TAG, TIGHTEN SECURELY | 1 |

**OCTANE FITNESS**
*Fuel Your Life*

DESCRIPTION
ASSEMBLY, PRO3700 BASE BOX, RoHS

SEE NOTES
SEE NOTES

DWG. NO. D 103042-001