THE INFORMATION CONTAINED IN THIS DRAWING IS THE SOLE PROPERTY OF OCTANE FITNESS. ANY REPRODUCTION IN PART OR WHOLE WITHOUT THE WRITTEN PERMISSION OF OCTANE FITNESS IS PROHIBITED.

REV	DESCRIPTION	ECN #	DATE	ENG
-	See Sheet1	-	-	-

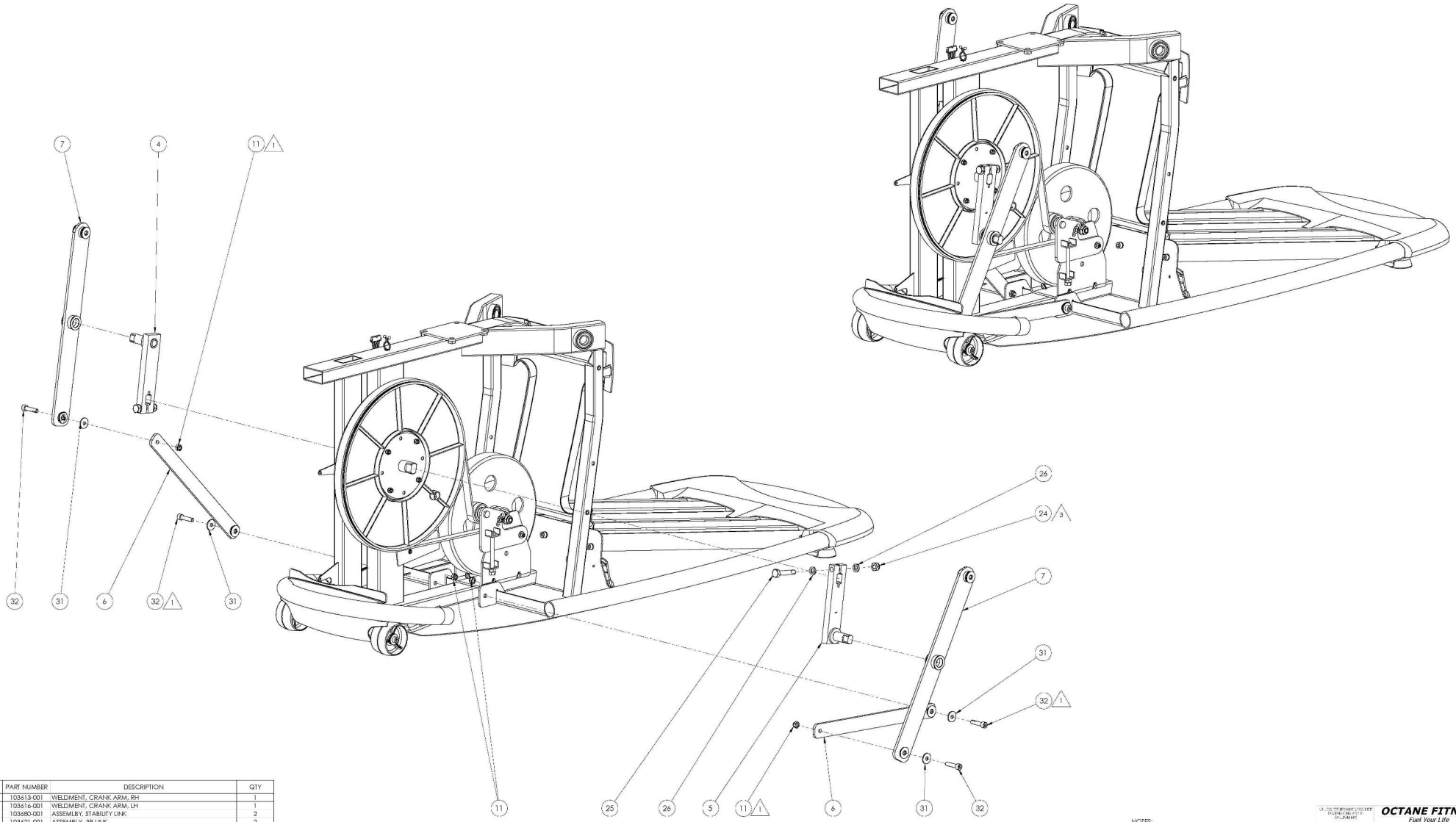

ITEM NO.	PART NUMBER	DESCRIPTION	QTY
4	103613-001	WELDMENT, CRANK ARM, RH	1
5	103616-001	WELDMENT, CRANK ARM, LH	1
6	103680-001	ASSEMBLY, STABILITY LINK	2
7	103621-001	ASSEMBLY, 3P LINK	2
11	103393-001	NUT, HEX, NYLON INSERT, M8 X 1.25, CZ CLASS 10	4
24	103395-001	NUT, HEX, NYLON INSERT, M10 X 1.5, CZ CLASS 10	2
25	100715-001	BOLT, M10 X 1.5 X 55, HEX HEAD, GR 8.8, CZ	2
26	950052-009	B18.21.2M, WASHER, LOCK, STL, M10	4
31	102454-001	WASHER, 8 X 24 X 2, STEEL, CZ	4
32	103728-001	SCREW, M8 X 1.25 X 35.0L SHCS, BLACK ZINC, GR 12.9	4

NOTES:

1. TORQUE FASTENER TO 23 N-M (17 FT-LB)
2. TORQUE FASTENER TO 45 N-M (33 FT-LB)
3. TORQUE FASTENER TO 75 N-M (55 FT-LB)

UNLESS OTHERWISE SPECIFIED DIMENSIONS ARE IN MILLIMETERS

TOLERANCES ARE:

DECIMALS ANGLES
.X ±0.6 ±0.5°
.XX ±0.20
.XXX ±0.100

OCTANE FITNESS
Fuel Your Life

PART DESCRIPTION
PRO310 BASE INTL

APPROVALS	DATE	SIZE	DWG. NO.	REV
DRAWN BY:		B	105600-001	P
CHECKED BY:	7/30/2015	SCALE: 1:8	SHEET 1 OF 1	