THE INFORMATION CONTAINED IN THIS DRAWING IS THE SOLE PROPERTY OF OCTANE FITNESS. ANY REPRODUCTION IN PART OR WHOLE WITHOUT THE WRITTEN PERMISSION OF OCTANE FITNESS IS PROHIBITED.

REV	DESCRIPTION	ECN #	DATE	ENG
-	See Sheet1	-	-	-

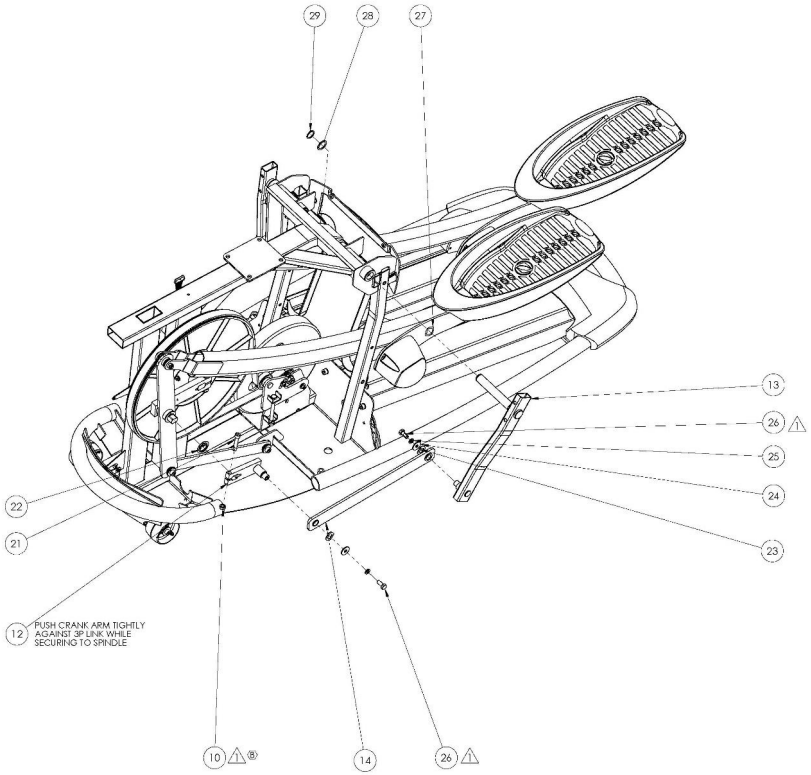

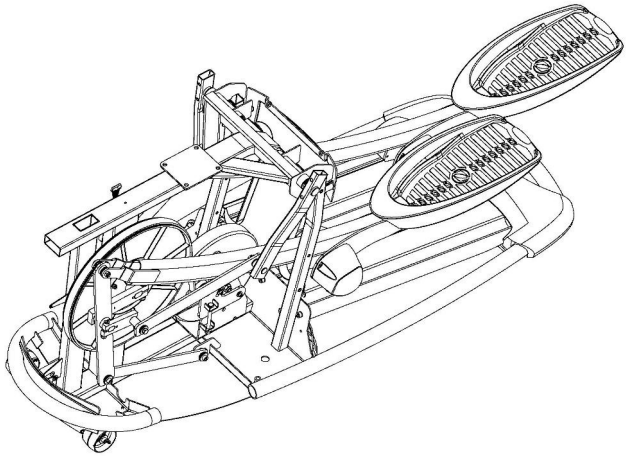

ITEM NO.	PART NUMBER	DESCRIPTION	CONFIG 3/QTY.
10	103393-001	NUT, HEX, NYLON INSERT, M8 X 1.25, C2 CLASS 10	12
12	104640-001	WELDMENT, OFFSET CRANK	2
13	104329-001	WELDMENT, ROCKER	2
14	104326-001	ASSEMBLY, 2P LINK	2
21	101296-001	SCREW, M8 X 1.25 X 45.00, SHCS, BLACK ZINC, 12.9 STL	2
22	103732-001	WASHER, CENTER 3P	2
23	103682-001	SPRING WASHER, 14MM, PLASTIC	4
24	102454-001	WASHER, 8 X 24 X 2, STEEL, C2	8
25	950052-008	B18.21.2M, WASHER, LOCK, STL, M8	4
26	102453-001	BOLT, M8 X 1.25 X 20, HEX HEAD, GR 8.8, C2	4
27	104410-001	WASHER, WAVE, 21 X 28 X .35	2
28	104411-001	WASHER, 20.5 X 29 X 1, ST	2
29	100450-001	RING, EXT RETAINING, 20MM	2

NOTES:

1. TORQUE FASTENER TO 23 N-M (17 FT-LBS)
2. TORQUE FASTENER TO 45 N-M (33 FT-LBS)
3. TORQUE FASTENER TO 75-80 N-M (55-59 FT-LBS)

UNLESS OTHERWISE SPECIFIED DIMENSIONS ARE IN MILLIMETERS

TOLERANCES ARE:

DECIMALS .X ±0.4 .XX ±0.20 .XXX ±0.100

ANGLES ±0.5°

OCTANE FITNESS
Fuel Your Life

PART DESCRIPTION
ASSEMBLY, Q35 BASE, 2013

APPROVAL: Edwin Jr. DATE: 9/13/2013

SIZE: D DWG. NO.: 108100-001 REV: B

SCALE: 1:8 DO NOT SCALE DRAWING SHEET 1 OF 1