THE INFORMATION CONTAINED IN THIS DRAWING IS THE SOLE PROPERTY OF OCTANE FITNESS. ANY REPRODUCTION IN PART OR WHOLE WITHOUT THE WRITTEN PERMISSION OF OCTANE FITNESS IS PROHIBITED.

REV	DESCRIPTION	ECO #	DATE	ENG
-	See Sheet1	-	-	-

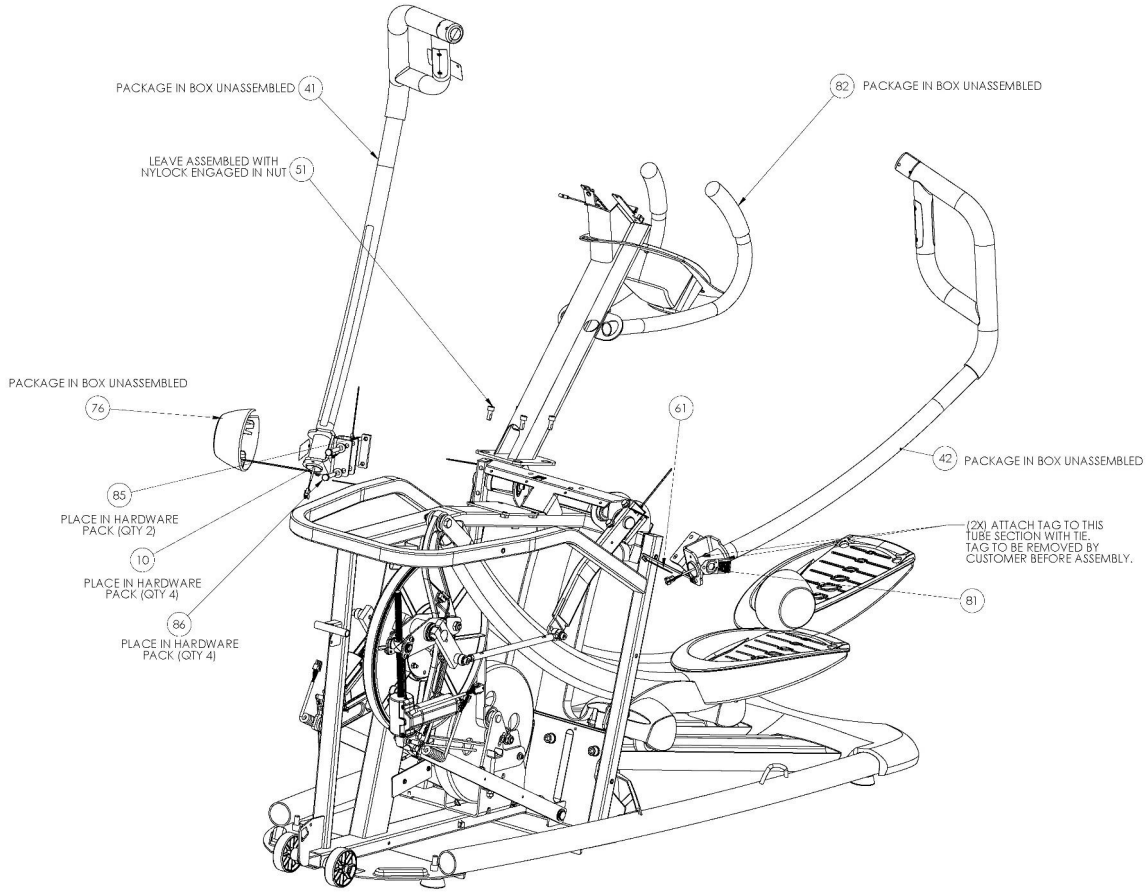

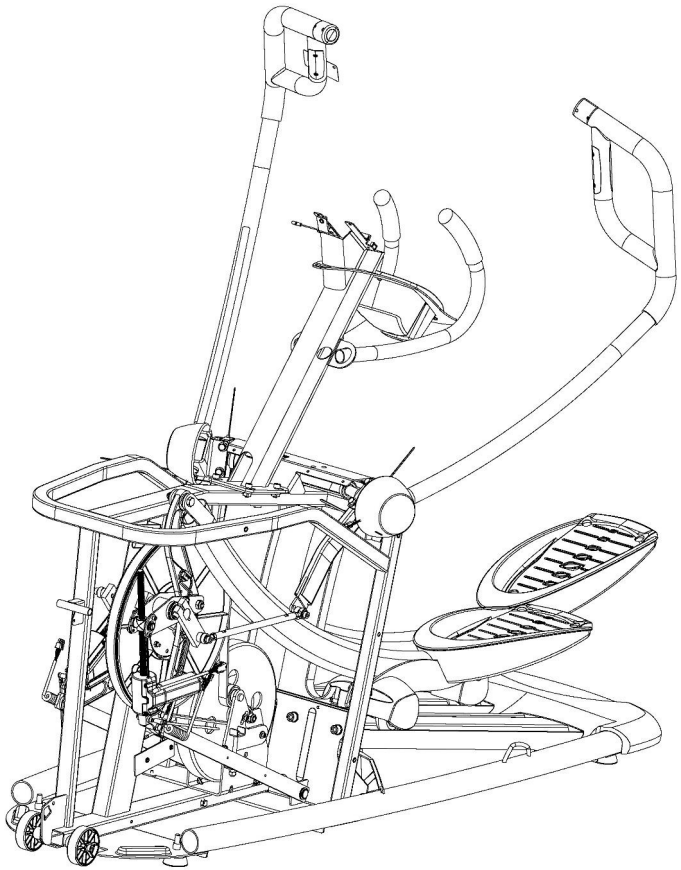

NOTES:

1. OCTANE FITNESS ENGINEERING APPROVAL ON FIRST SAMPLES AND VENDOR INSPECTION REPORT REQUIRED PRIOR TO PRODUCTION FROM NEW OR REVISED TOOLING.

ITEM NO.	PART NUMBER	DESCRIPTION	2 - arms and mast/QTY.
41	107870-001	ASSY, MULTI-GRIP HR ARM, Q47, RH	1
42	107873-001	ASSY, MULTI-GRIP HR ARM, Q47, LH	1
51	101295-001	SCREW, M8 X 1.25 X 20.0L SHCS, BLACK ZINC, 12.9 STL	4
61	101314-001	TIE, PUSH MOUNT, W2.5×L112	4
76	101979-001	COVER, HANDLE BAR, NO DUAL LOCK	2
81	102287-001	TAG, BOLTS VERY TIGHT	2
82	107820-001	ASSEMLBY, CONSOLE MAST, Q47	1
85	107213-001	BAR, ARM, M8 HOLES	2
86	103735-001	BOLT, M8 X 1.25 X 65 HCS, GR 12.9, CZ	4

SUBJECT COMPONENTS DESCRIBED BUSINESS OCTANE FITNESS WILL LISTEN CLEARANCES: BAR

DRAWN			7/12/2007
CHECKED			XX-XX-XX
ENG APPR			XX-XX-XX
MFG APPR			XX-XX-XX
Q.A.			XX-XX-XX

SEE NOTES

SEE NOTES

DO NOT SCALE DRAWING

OCTANE FITNESS
Fuel Your Life

DESCRIPTION
ASSEMBLY, Q47 TOP LEVEL

SIZE D | DWG. NO. 108000-001 | REV F

SCALE: 1:1 | WEIGHT: | SHEET 2 OF 2