THE INFORMATION CONTAINED IN THIS DRAWING IS THE SOLE PROPERTY OF OCTANE FITNESS. ANY REPRODUCTION IN PART OR WHOLE WITHOUT THE WRITTEN PERMISSION OF OCTANE FITNESS IS PROHIBITED.

REV	DESCRIPTION	ECO #	DATE	ENG
-	See Sheet1	-	-	-

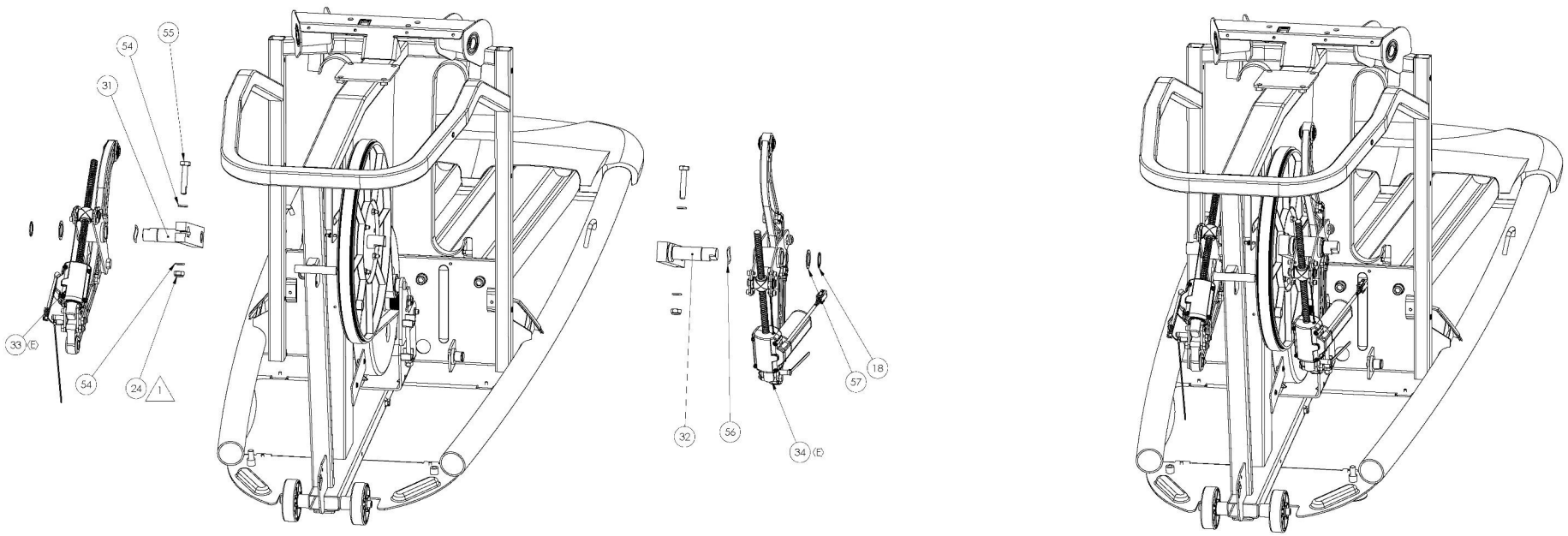

NOTES:

1. TORQUE FASTENER TO 75 N-M (55 FT-LB)

2. OCTANE FITNESS ENGINEERING APPROVAL ON FIRST SAMPLES AND VENDOR INSPECTION REPORT REQUIRED PRIOR TO PRODUCTION FROM NEW OR REVISED TOOLING.

ITEM NO.	PART NUMBER	DESCRIPTION	5 - actuator link and crank/QTY.
18	900009-001	RING, RETAINING, 25MM	4
24	950046-009	NUT, HEX, NYLON INSERT, STL, M10	6
31	101659-001	WELDMENT, RIGHT CRANK ARM	1
32	101658-001	WELDMENT, LEFT CRANK ARM	1
54	950052-009	B18.21.2M, WASHER, LOCK, STL, M10	4
55	100715-001	BOLT, M10 X 1.5 X 55, HEX HEAD, 12.9 STL, CZ	4
56	101277-001	WASHER, WAVE, 26.2 X 33.9 X 0.4	2
57	101243-001	WASHER, PIVOT SHAFT, Q35 - 25MM	2

UNLESS OTHERWISE SPECIFIED DIMENSIONS ARE IN MILLIMETERS. TOLERANCES ARE: FRACTIONS ± 1/64 ANGLES ± 0.5° DECIMALS ± 0.1 ± 0.05 ± 0.01	CAD DRAWING DRAWING DO NOT MANUALLY UPDATE		
	DRAWN		
	ENG MGR		2012/07
MATERIAL SEE NOTES	CHECKED		XX-XX-XX
	APPR MGR		XX-XX-XX
FINISH SEE NOTES	MFG MGR		XX-XX-XX
	QUAL ENG		XX-XX-XX
DO NOT SCALE DRAWING			

OCTANE FITNESS
Fuel Your Life

DESCRIPTION
ASSEMBLY, Q47 TOP LEVEL

SIZE D | DWG. NO. 108000-001 | REV F

SCALE 1:1 | CAD FILE | SHEET 5 OF 6