THE INFORMATION CONTAINED IN THIS DRAWING IS THE SOLE PROPERTY OF OCTANE FITNESS. ANY REPRODUCTION IN PART OR WHOLE WITHOUT THE WRITTEN PERMISSION OF OCTANE FITNESS IS PROHIBITED.

REV	DESCRIPTION	ECN #	DATE	ENG
-	See Sheet1	-	-	-

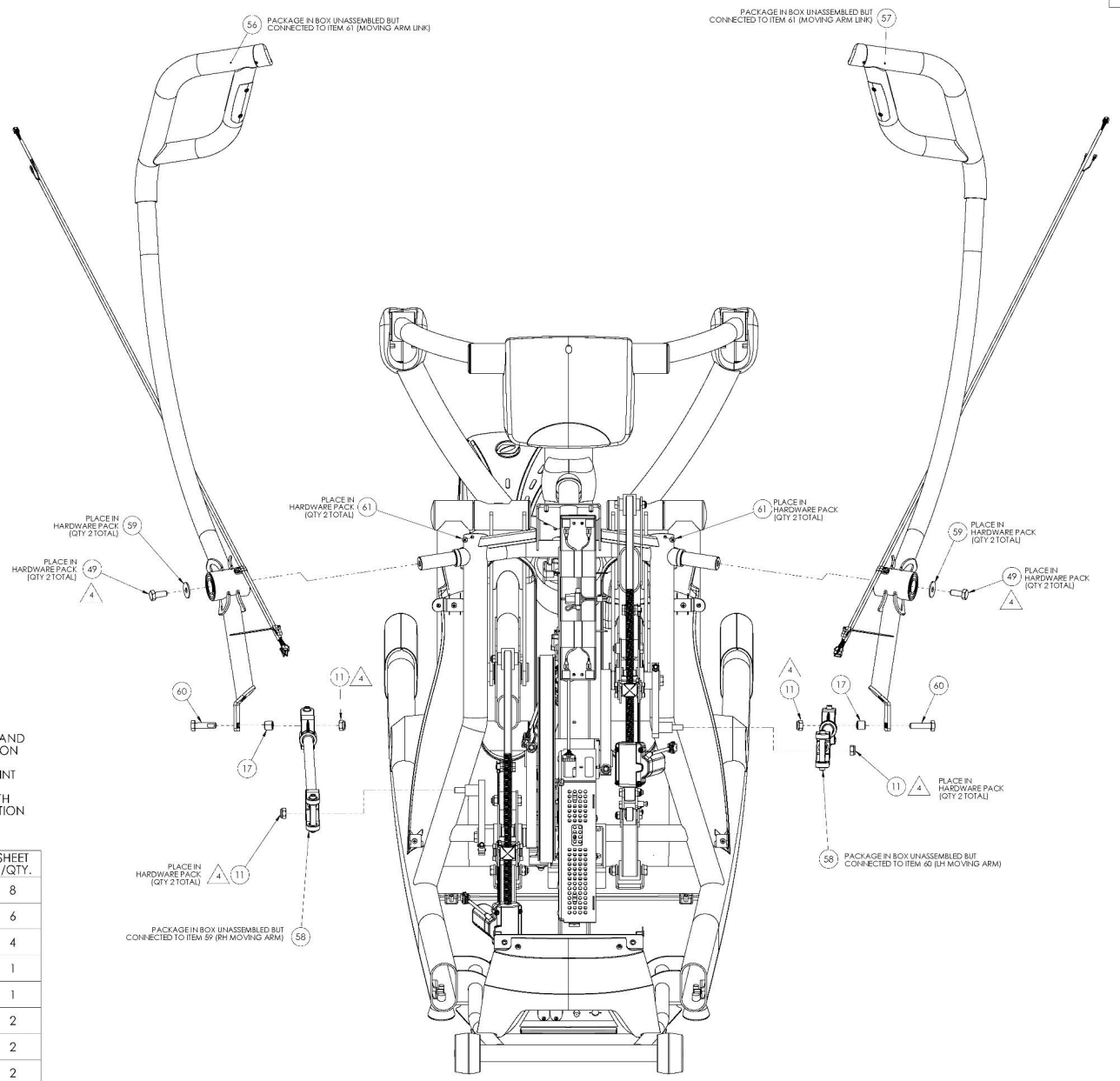

NOTES:

1. TORQUE FASTENER TO 6 N-M (4 FT-LBS)
2. TORQUE FASTENER TO 12 N-M (9 FT-LBS)
3. TORQUE FASTENER TO 23 N-M (17 FT-LBS)
4. TORQUE FASTENER TO 45 N-M (33 FT-LBS)
5. TORQUE FASTENER TO 60 N-M (44 FT-LBS)
6. TORQUE FASTENER TO 75 N-M (55 FT-LBS)
7. TORQUE FASTENER TO 102 N-M (75 FT-LBS)
8. OCTANE FITNESS ENGINEERING APPROVAL ON FIRST SAMPLE AND VENDOR INSPECTION REPORT REQUIRED PRIOR TO PRODUCTION FROM NEW OR REVISED TOOLING.
9. CAD GENERATED MODEL. ANY DIMENSIONS NOT ON THIS PRINT SHOULD BE EXTRACTED FROM THE CAD MODEL.
10. SUPPLIER MUST SUPPLY A DECLARATION OF COMPLIANCE WITH EUROPEAN COUNCIL DIRECTIVE 2011/65/EU, ON THE RESTRICTION OF USE OF CERTAIN HAZARDOUS SUBSTANCES (RoHS).

ITEM NO.	PART NUMBER	DESCRIPTION	SHEET 4/QTY.
11	103395-001	NUT, HEX, NYLON INSERT, M10 X 1.5, CZ CLASS 10	8
17	109684-001	SPACER, BEARING	6
49	106618-001	BOLT, M10 X 1.5 X 25, HEX HEAD, CLASS 10.9	4
56	109258-001	ASSY, MULTI-GRIP HR ARM, RH	1
57	109261-001	ASSY, MULTI-GRIP HR ARM, LH	1
58	108942-001	ASSY, MOVING ARM LINK	2
59	101720-001	WASHER, 10 X 30 X 2, STEEL, CZ	2
60	109685-001	BOLT, M10 X 1.5 X 40, HEX HEAD, CLASS 10.9	2
61	100429-001	SCREW, M4.8 X 1.6 X 13 TYPE B, TYPE 1 CROSS RECESS PAN HEAD, ST, BZ	22

UNLESS OTHERWISE SPECIFIED DIMENSIONS ARE IN MILLIMETERS

TOLERANCES ARE:
DECIMALS X ±0.6 XX ±0.20 XXX ±0.100
ANGLES ±0.5°

OCTANE FITNESS
Fuel Your Life

PART DESCRIPTION
XT-ONE BASE

APPROVED: | DATE: 4/29/2015 | SIZE: B | DWG. NO.: 109100-001 | REV: -
ENTERED BY: | SCALE: | DO NOT SCALE DRAWING | SHEET 1 OF 1