THE INFORMATION CONTAINED IN THIS DRAWING IS THE SOLE PROPERTY OF OCTANE FITNESS. ANY REPRODUCTION IN PART OR WHOLE WITHOUT THE WRITTEN PERMISSION OF OCTANE FITNESS IS PROHIBITED.

REV	DESCRIPTION	ECN #	DATE	ENG
-	See Sheet 0	-	-	-

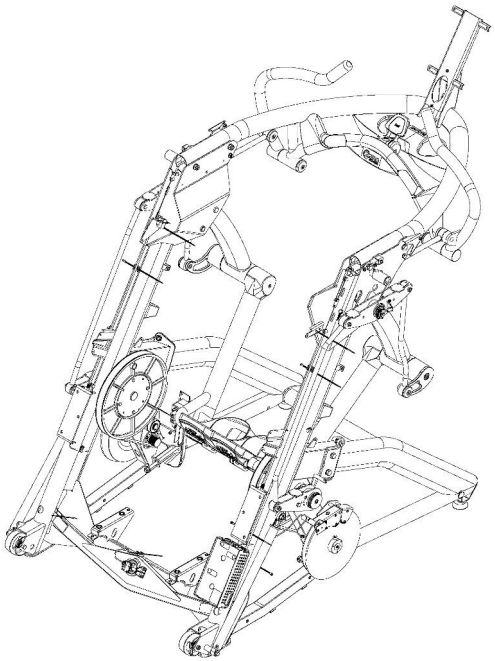

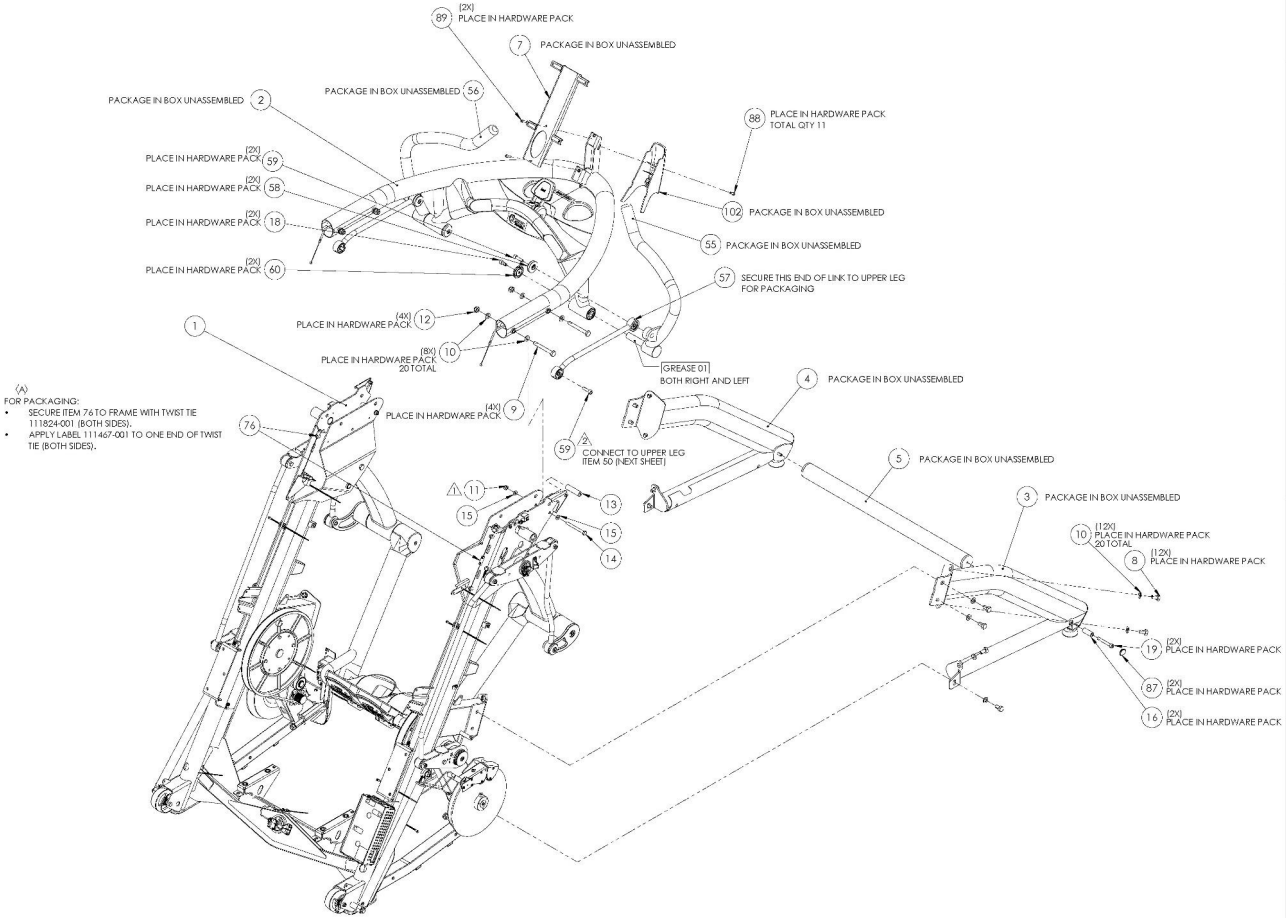

ITEM NO.	PART NUMBER	DESCRIPTION	QTY
1	111909-001	ASSEMBLY, ZR7000 FRAME	1
2	111990-001	ASSY, TOP HOOP, ZR7000	1
3	109292-001	ASSY, BRACE LEG, RH	1
4	109293-001	ASSY, BRACE LEG, LH	1
5	108298-001	WELDMENT, CROSS BRACE	1
7	110464-001	WELDMENT, CONSOLE MOUNT FRAME	1
8	100716-001	BOLT, M10 X 1.5 X 20, HEX HEAD, GR 8.8, CZ	12
9	106591-001	BOLT, M10 X 1.5 X 85, HEX HEAD, CLASS 10.9	4
10	950042-009	B18.22M, WASHER, PLAIN, STL, M10	20
11	103393-001	NUT, HEX, NYLON INSERT, M8 X 1.25, CZ CLASS 10	2
12	103395-001	NUT, HEX, NYLON INSERT, M10 X 1.5, CZ CLASS 10	4
13	109006-001	SPACER, MAIN FRAME	2
14	108658-001	BOLT, M8 X 1.25 X 80 HCS, GR 12.9, CZ	2
15	101029-001	WASHER, M8, 8.3 X 16.0 X 1.6, ST, BZ	5
16	109487-001	SPACER, BOLT	2
18	104697-001	SCREW, M8 X 1.25 X 20.0L SHCS, CLEAR ZINC, 12.9 STL	2
19	102569-001	SCREW, M8 X 1.25 X 60.0L SHCS, BLACK ZINC, 12.9 STL	2
55	111984-001	ASSY, MOVING ARM, RH	1
56	111985-001	ASSY, MOVING ARM, LH	1
57	112318-001	ASSY, ARM LINK, SELF-ALIGNING	2
58	112040-001	ASSY, ARM LINK END CAP	2
59	111085-001	SCREW, M8 X 1.25 X 30.0L SHCS, 12.9 STL, NICKEL PLATED	4
60	109910-001	CAP, LINKAGE, 43 DIA	2
76	109471-001	CABLE CONNECTOR, DUAL	2
87	109880-001	PLUG, FRAME TUBE	2
88	102134-001	SCREW, M5 X 0.8 X 18, PAN HEAD, TYPE 1 CROSS RECESSED, SS	1
89	950005-009	B18.3.1M, M5 X 0.8 X 20.0L SHCS, BLACK ZINC, STL	2
102	110517-001	COVER ASSEMBLY, CONSOLE MAST MOUNT MOUNT	1

APPLICABLE OCTANE FITNESS SPECIFICATIONS

SPEC NO.	SPECIFICATION TITLE
OFS-001	BELT TENSION REQUIREMENTS
OFS-004	GREASE SPECIFICATIONS

NOTES:

1. TORQUE FASTENER TO 23 N-M. (17 FT-LBS)
2. TORQUE FASTENER TO 45 N-M. (33 FT-LBS)
3. OCTANE FITNESS ENGINEERING APPROVAL ON FIRST SAMPLE AND VENDOR INSPECTION REPORT REQUIRED PRIOR TO PRODUCTION FROM NEW OR REVISED TOOLING.
4. SUPPLIER MUST SUPPLY A DECLARATION OF COMPLIANCE WITH EUROPEAN COUNCIL DIRECTIVE 2002/95/EC, ON THE RESTRICTION OF USE OF CERTAIN HAZARDOUS SUBSTANCES (RoHS).

UNLESS OTHERWISE SPECIFIED DIMENSIONS ARE IN INCHES

TOLERANCES ARE:
DECIMALS X ±0.6, XX ±0.20, XXX ±0.100
ANGLES ±0.5°

APPROVALS: DRAWN BY / DATE 5/6/2014

OCTANE FITNESS
Fuel Your Life

PART DESCRIPTION

DWG. NO. 111600-001 REV. B

SCALE: 1:8 SHEET 1 OF 1