THE INFORMATION CONTAINED IN THIS DRAWING IS THE SOLE PROPERTY OF OCTANE FITNESS. ANY REPRODUCTION IN PART OR WHOLE WITHOUT THE WRITTEN PERMISSION OF OCTANE FITNESS IS PROHIBITED.

REV	DESCRIPTION	ECN #	DATE	ENG
-	See Sheet1	-	-	-

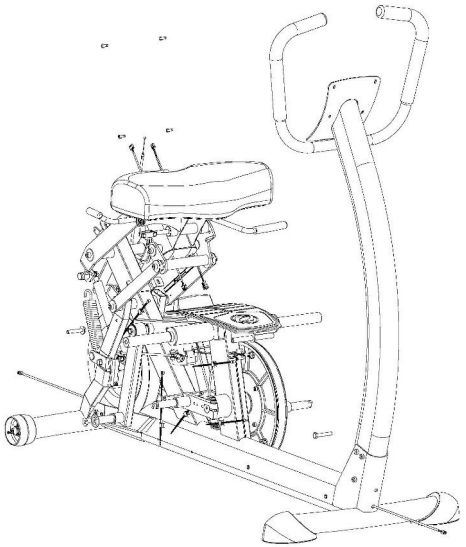

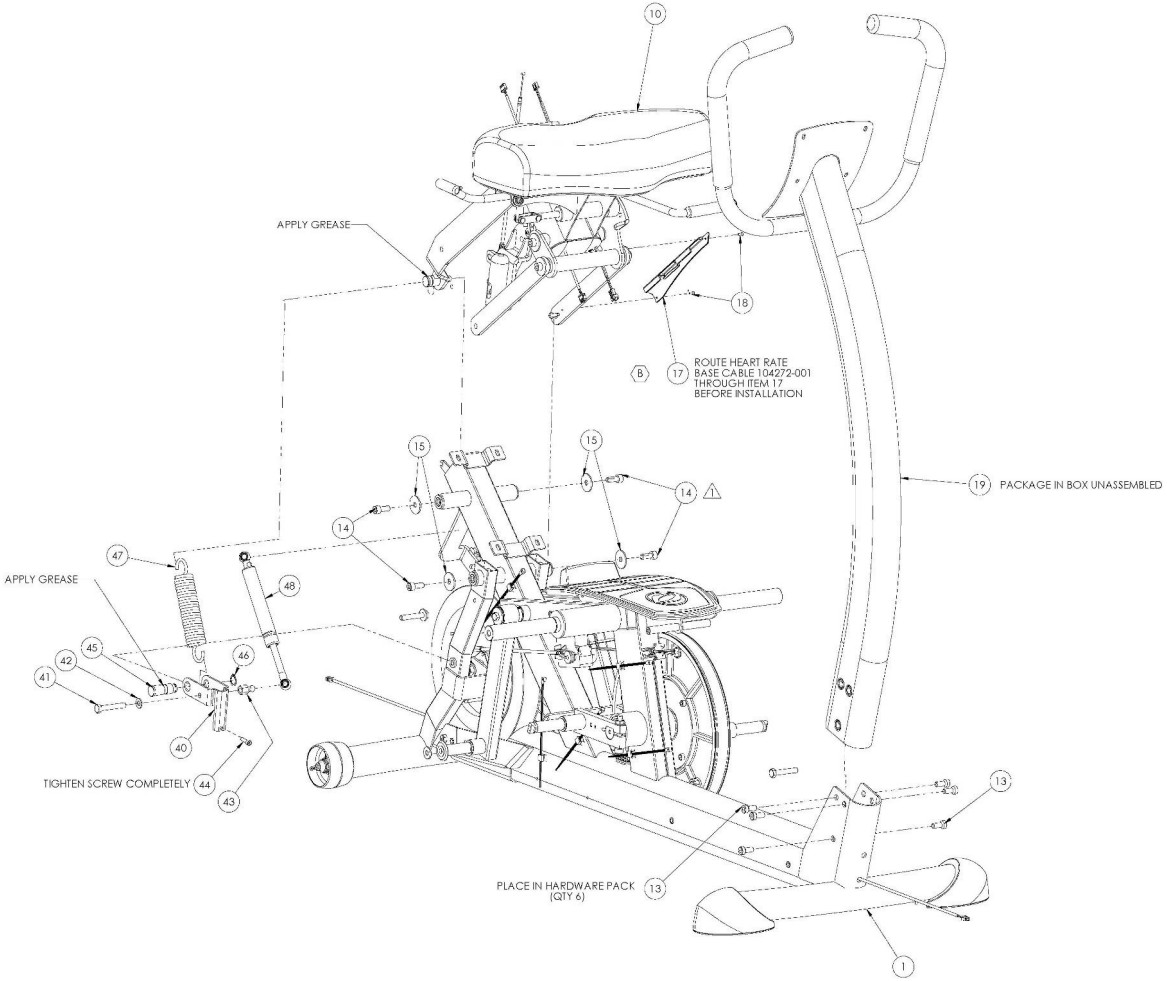

ITEM	PART NUMBER	DESCRIPTION	SHEET 3/QTY.
1	104399-001	ASSEMBLY, FRAME AND COMPONENTS	1
10	103700-001	ASSEMBLY, ADJUSTABLE SEAT	1
13	100754-001	SCREW, M8x1.25x16 SHCS, STL, BZ	6
14	104697-001	SCREW, M8 X 1.25 X 20.0L SHCS, CLEAR ZINC, 12.9 STL	4
15	102132-001	WASHER, 8.5 X 30 X 2 CZ	4
17	104515-001	RETAINER, HR CABLE	1
18	103237-001	SCREW, M3 X 0.5 X 8, FLAT SHCS, STAINLESS STEEL	2
19	104547-001	ASSEMBLY, xR4 MAST	1
40	104987-001	BRACKET, SPRING MOUNT	1
41	101889-001	SCREW, M8 X 1.25 X 50 HHCS, 8.8 ST, CZ	1
42	101029-001	WASHER, M8 8.3 X 16.0 X 1.6, ST, BZ	1
43	104971-001	NUT, BALL STUD	1
44	104988-001	SCREW, M5 X 0.8 X 18L SHCS, BZ	1
45	104970-001	PIN, SPRING MOUNT	1
46	101713-001	RETAINING RING, 14MM	1
47	104965-001	SPRING, EXTENSION, 31.8 X 165	1
48	104968-001	ASSEMBLY, DAMPER	1

NOTES:

1. TORQUE FASTENERS TO 23 N-M (17 FT-LBS)
2. OCTANE FITNESS ENGINEERING APPROVAL ON FIRST SAMPLE AND VENDOR INSPECTION REPORT REQUIRED PRIOR TO PRODUCTION FROM NEW OR REVISED TOOLING.
3. SUPPLIER MUST SUPPLY A DECLARATION OF COMPLIANCE WITH EUROPEAN COUNCIL DIRECTIVE 2002/95/EC, ON THE RESTRICTION OF USE OF CERTAIN HAZARDOUS SUBSTANCES (RoHS).

UNLESS OTHERWISE SPECIFIED DIMENSIONS ARE IN INCHES

TOLERANCES ARE:
DECIMALS X ±0.6, XX ±0.20, XXX ±0.100
ANGLES ±0.5°

OCTANE FITNESS
Fuel Your Life

PART DESCRIPTION
xR4 BASE WW

APPROVED BY | DATE 1/7/2009 | SIZE B | DWG. NO. 104400-001 | REV. P

SCALE: 1:8 | SHEET 1 OF 1