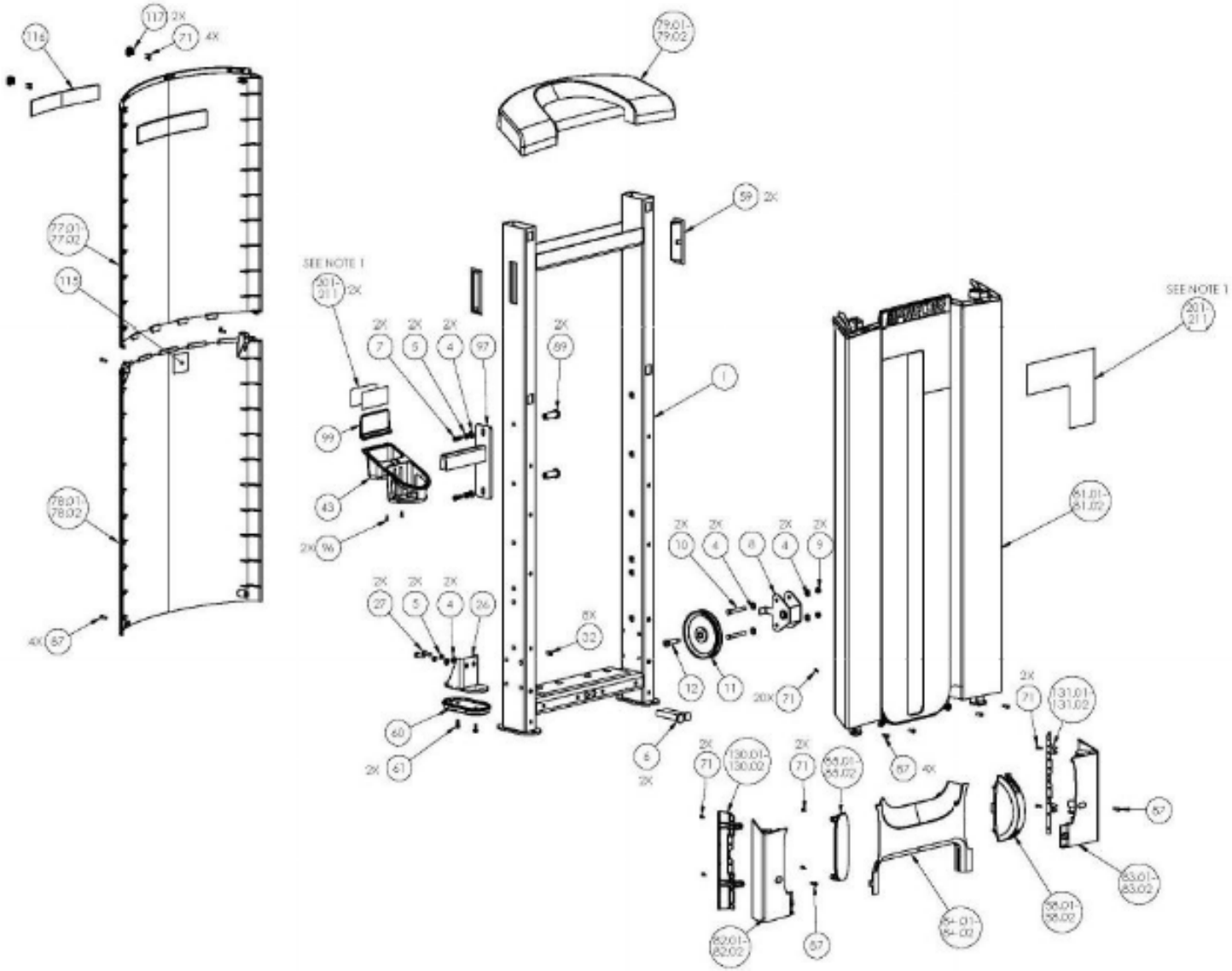
116
117 2X
71 4X
77.01-77.02
115
78.01-78.02
4X 87
79.01-79.02
59 2X
SEE NOTE 1
201-211 2X
2X 7
2X 5
2X 4
97
2X 69
1
99
43
2X 96
2X 27
2X 5
2X 4
26
60
2X 61
8X 32
2X 10
4
8
4
9
12
11
20X 71
6
2X
2X 71
130.01-130.02
2X 71
55.01-55.02
87 4X
2X 71
131.01-131.02
87
83.01-83.02
56.01-56.02
54.01-54.02
57
82.01-82.02
SEE NOTE 1
201-211
51.01-51.02