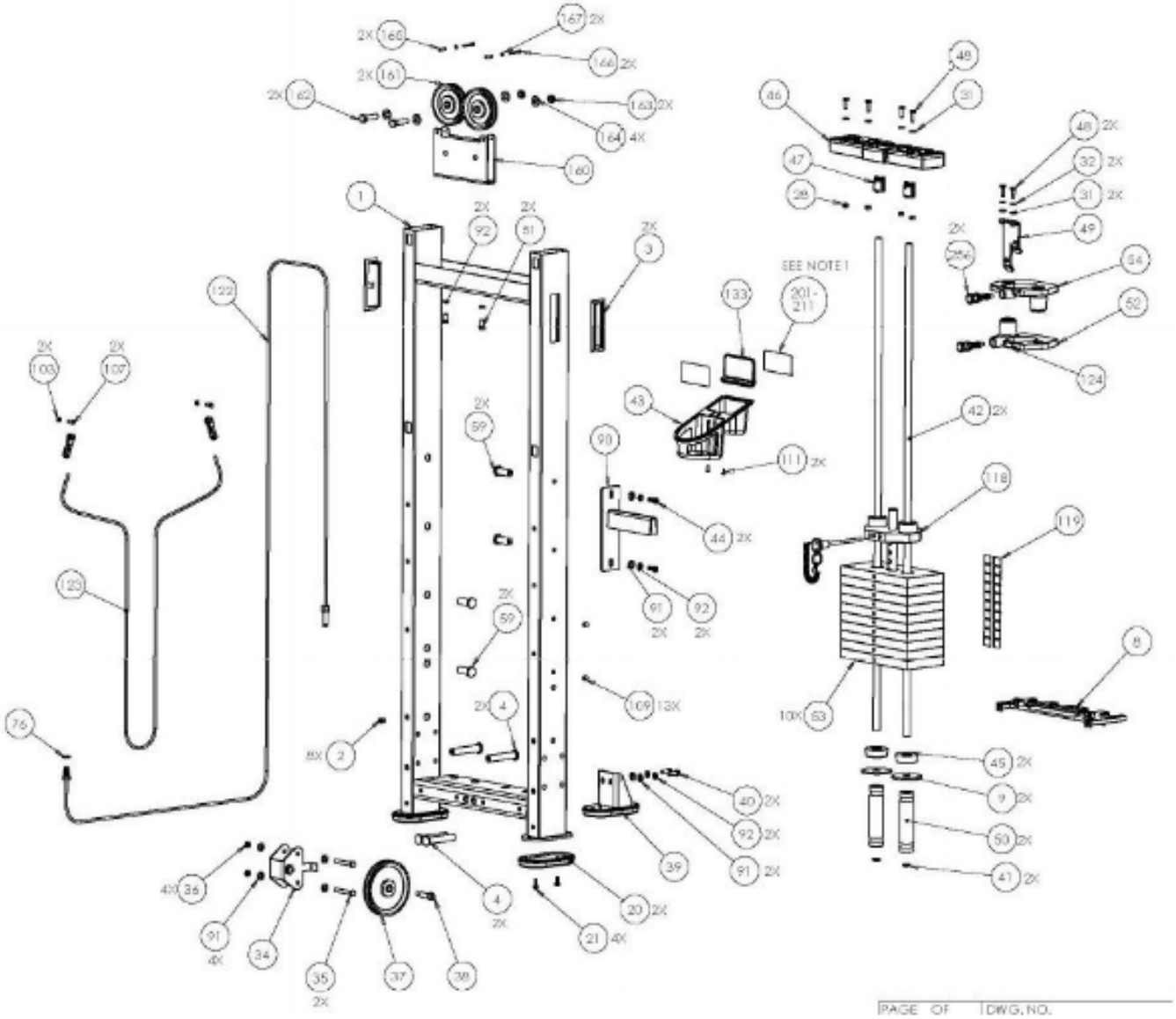
SEE NOTE 1
201-211
PAGE OF
DWG. NO.