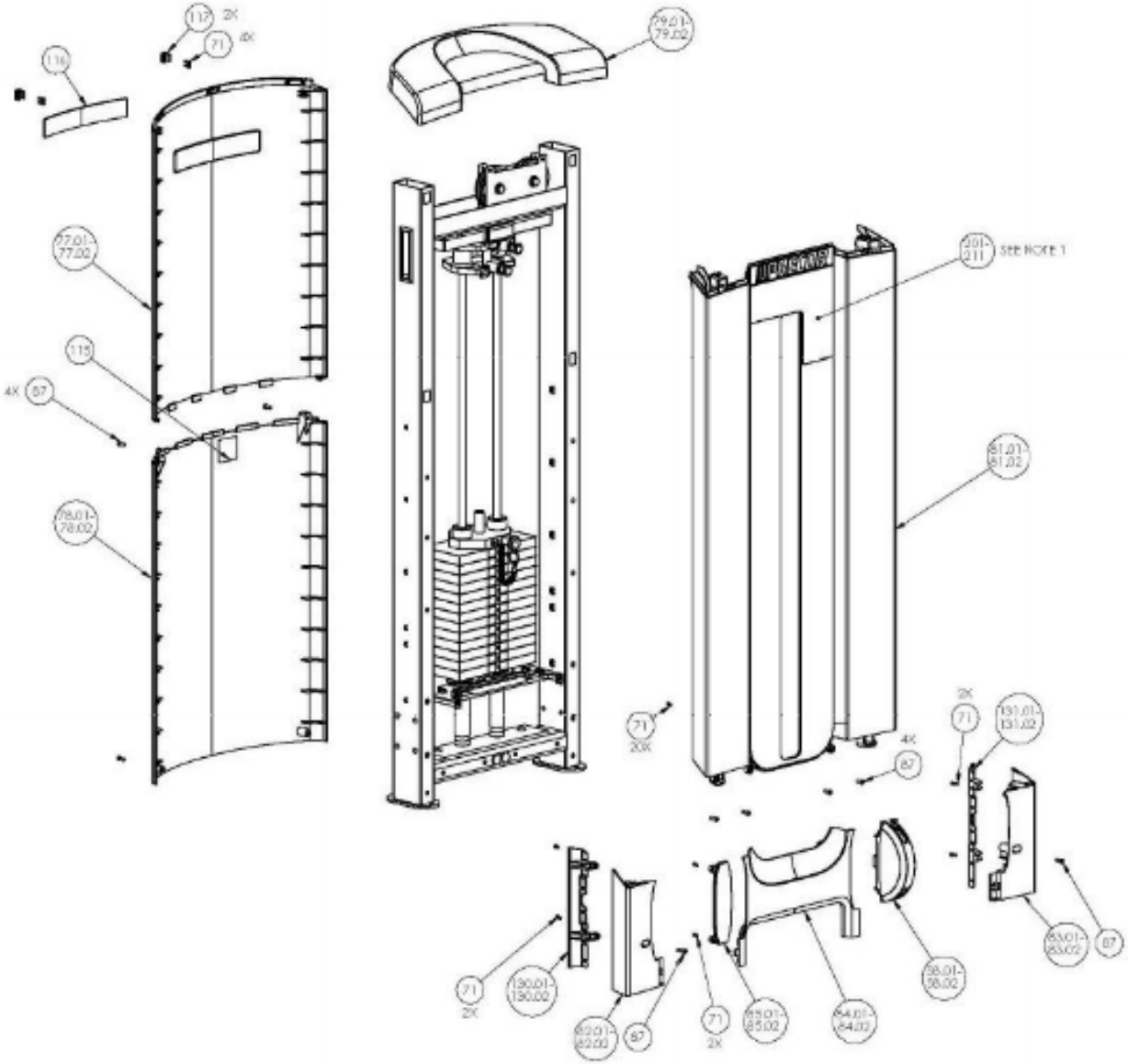
117
2X
71
4X
116
79.01-
79.02
77.01-
77.02
115
4X
87
78.01-
78.02
201-
211
SEE NOTE 1
81.01-
81.02
71
20X
4X
87
2X
71
131.01-
131.02
71
2X
130.01-
130.02
82.01-
82.02
87
71
2X
85.01-
85.02
84.01-
84.02
88.01-
88.02
83.01-
83.02
87