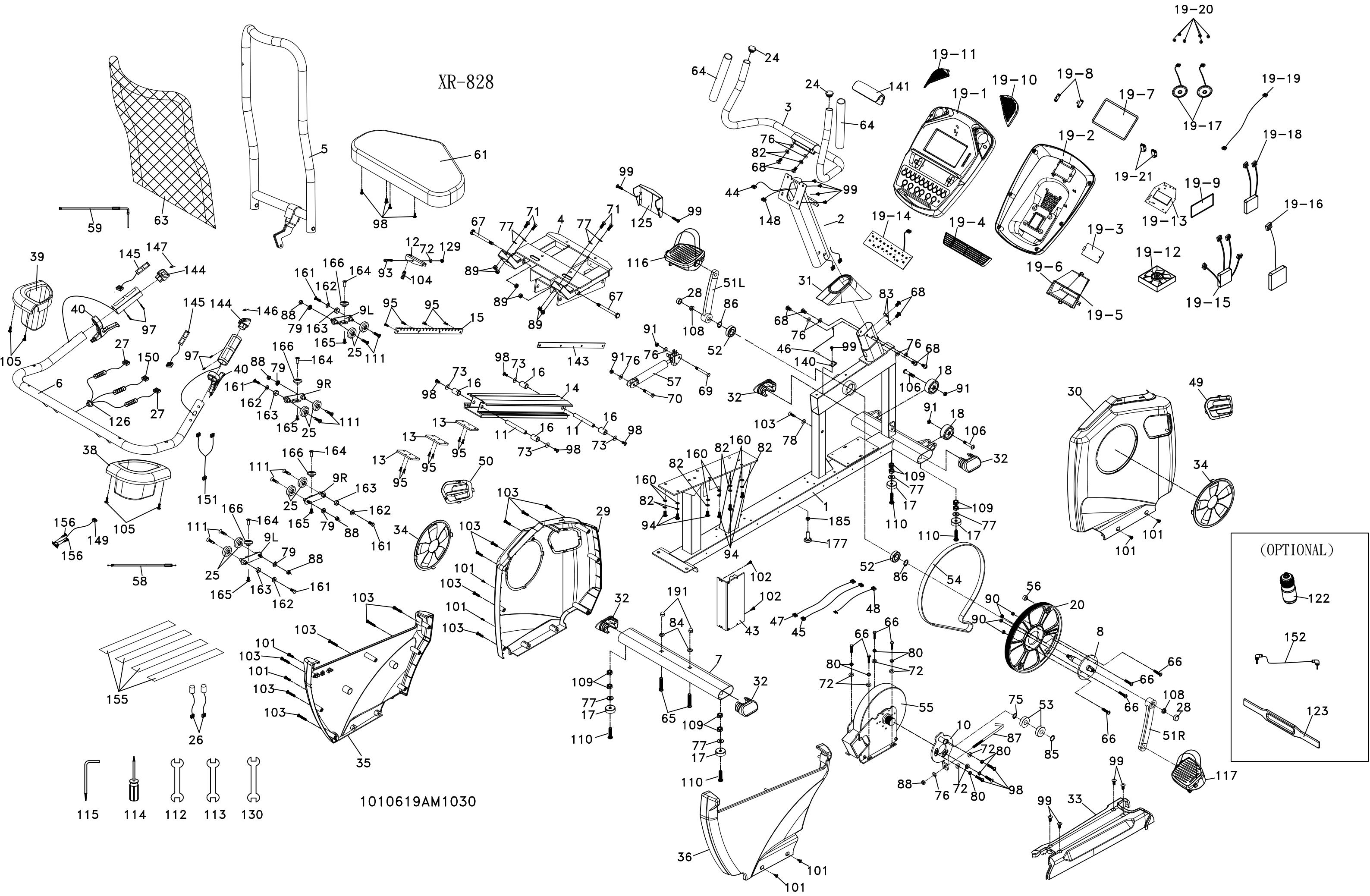
XR-828
1010619AM1030
(OPTIONAL)