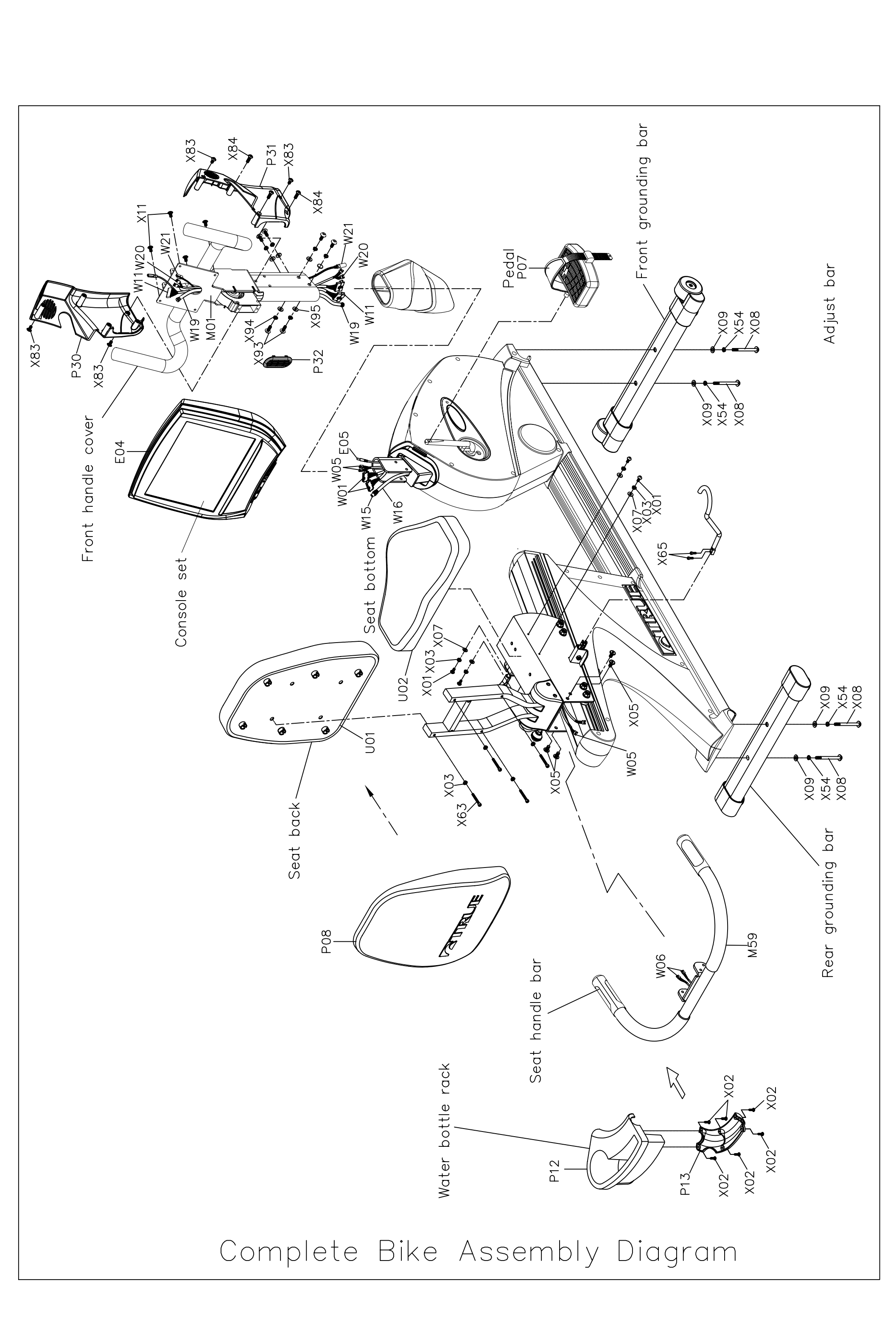

Complete Bike Assembly Diagram