TCS400 Exploded View

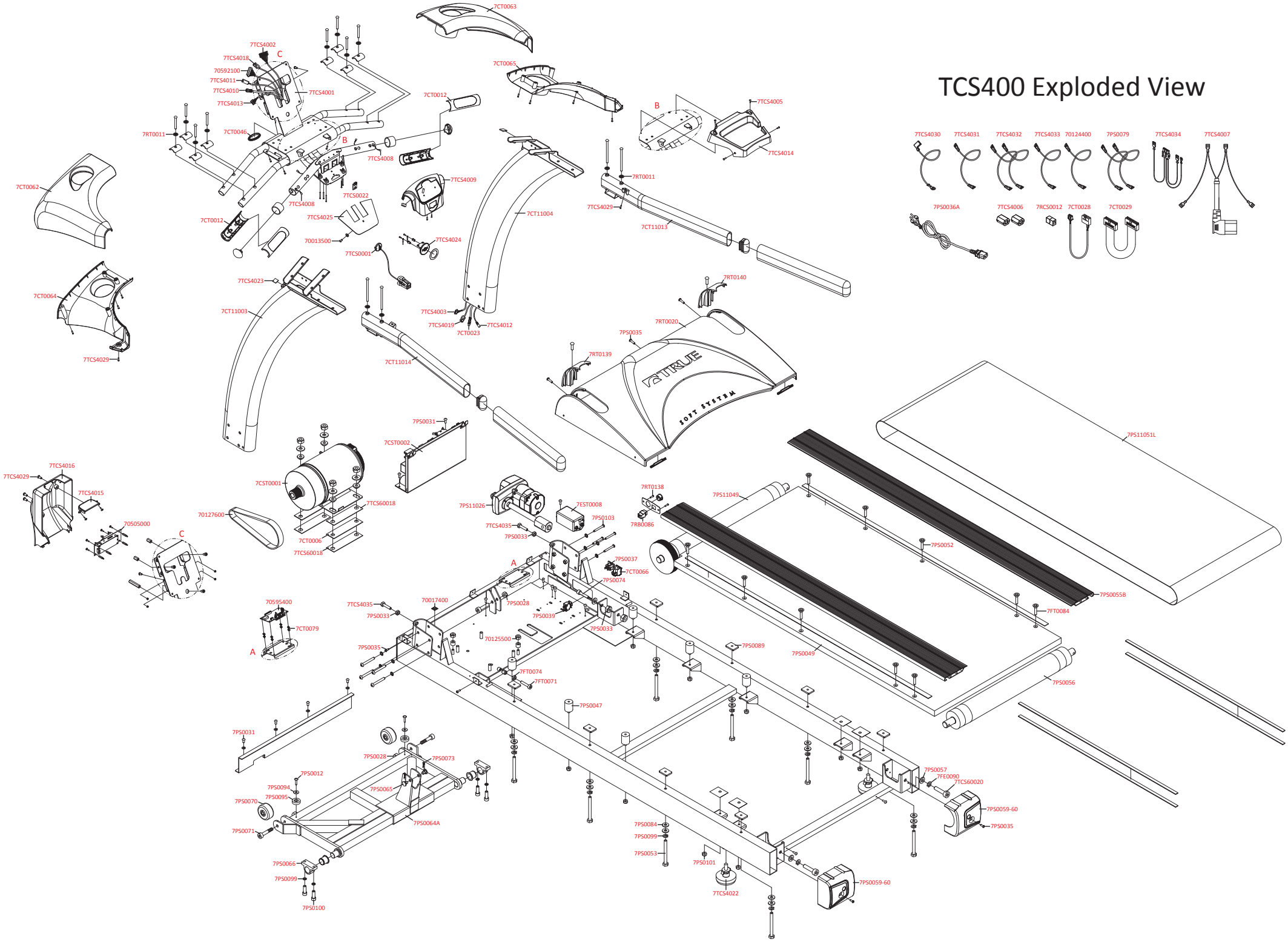
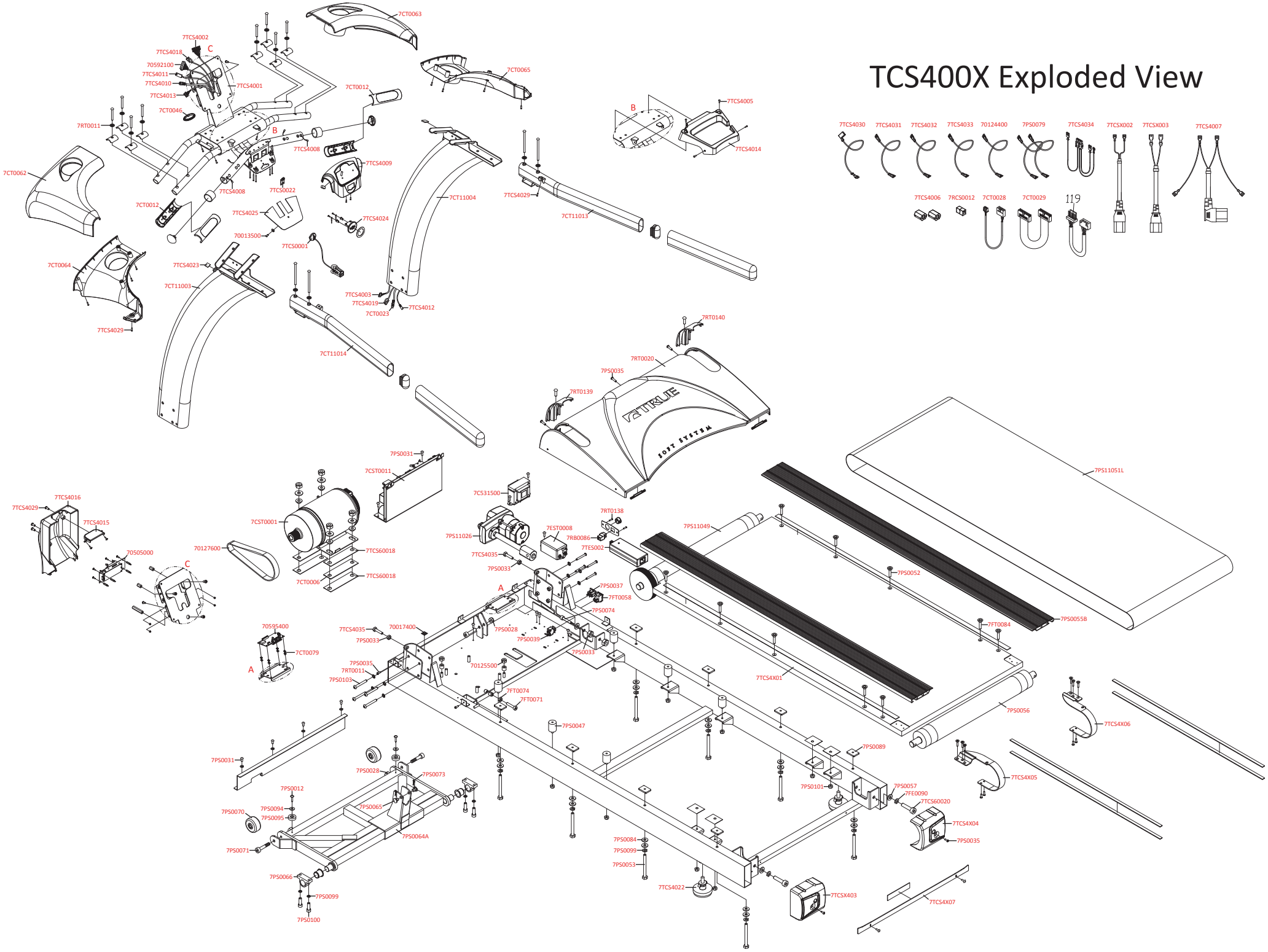
TCS400X Exploded View