TM50-4 Exploded View

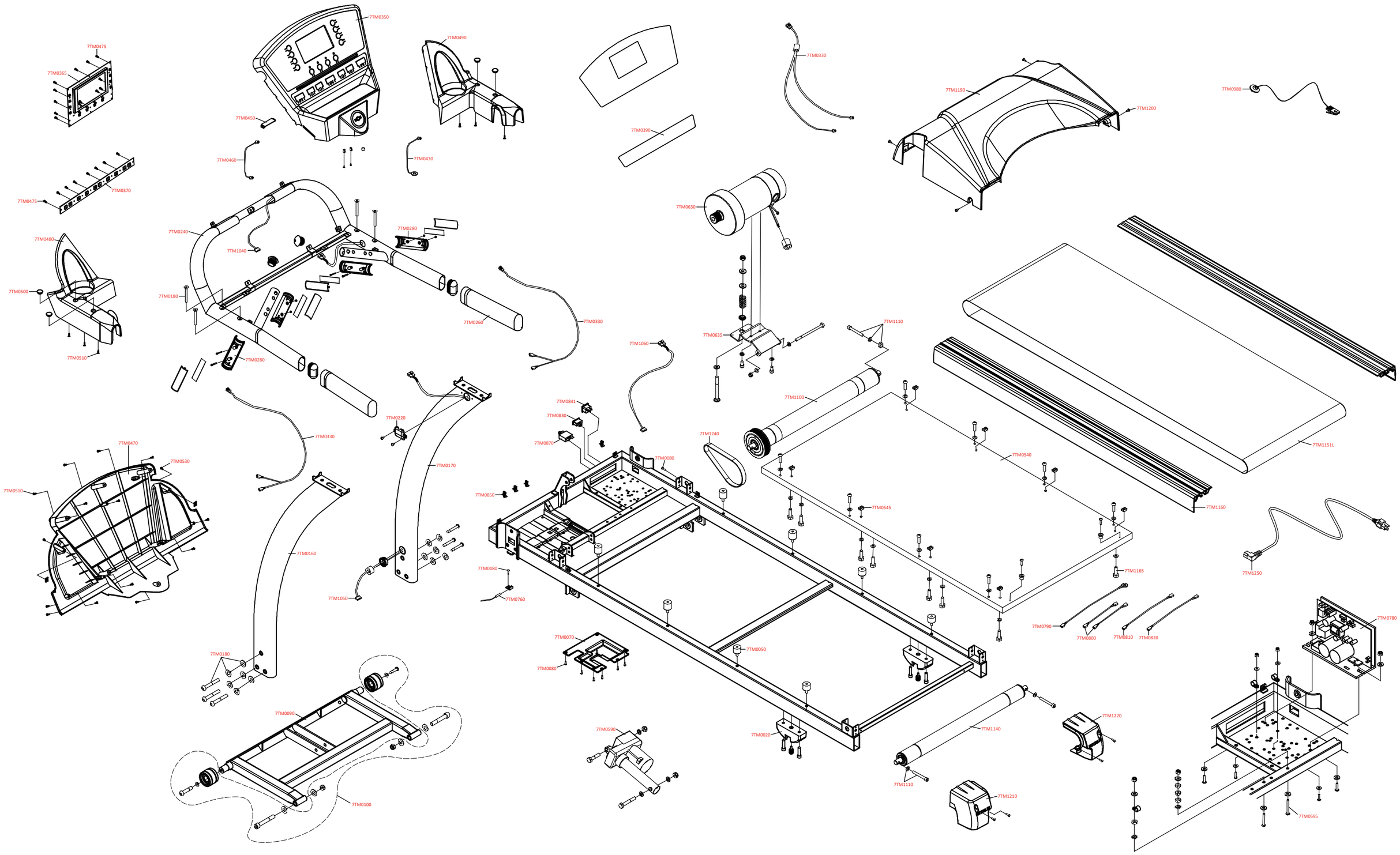

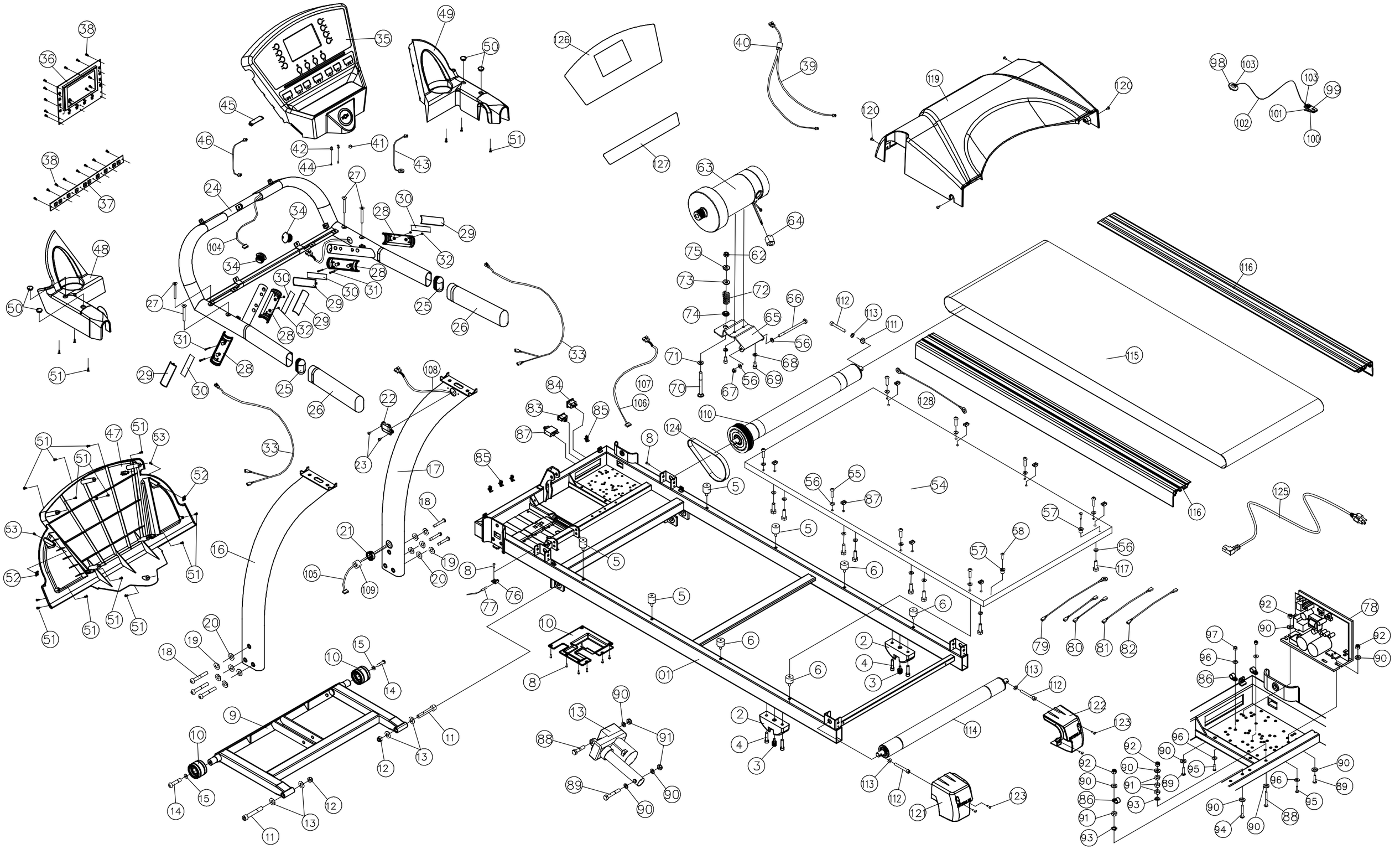

PAGE 1/1

TM 50 Treadmill

TRUE Fitness®

September 2011