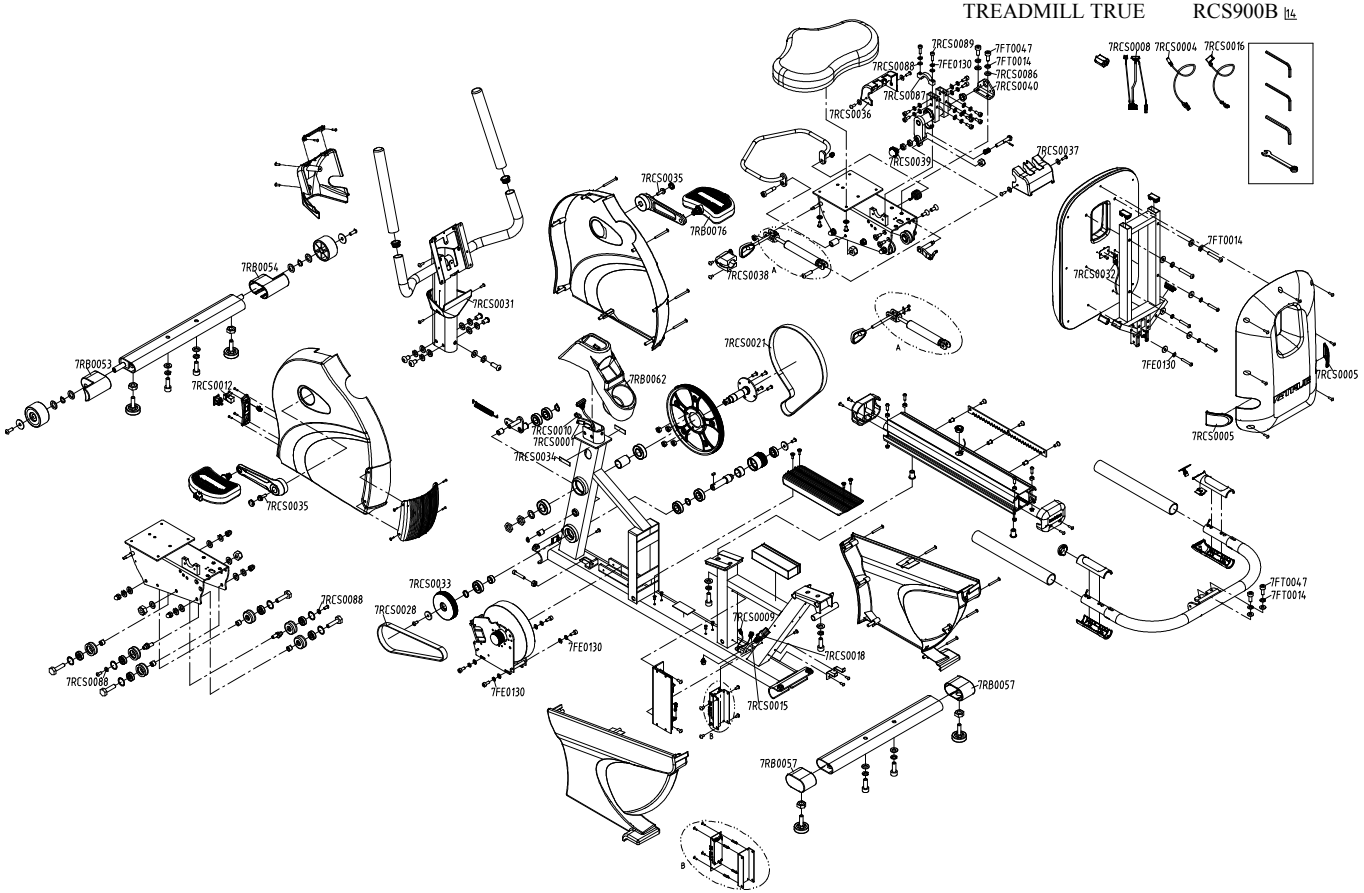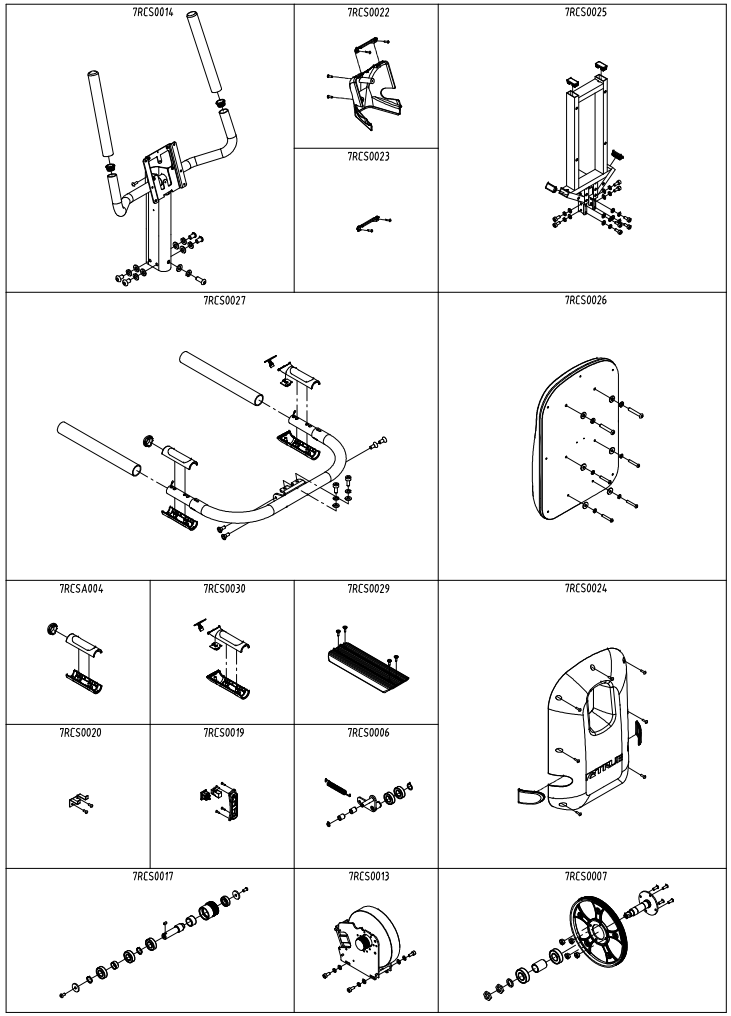TREADMILL TRUE RCS900B