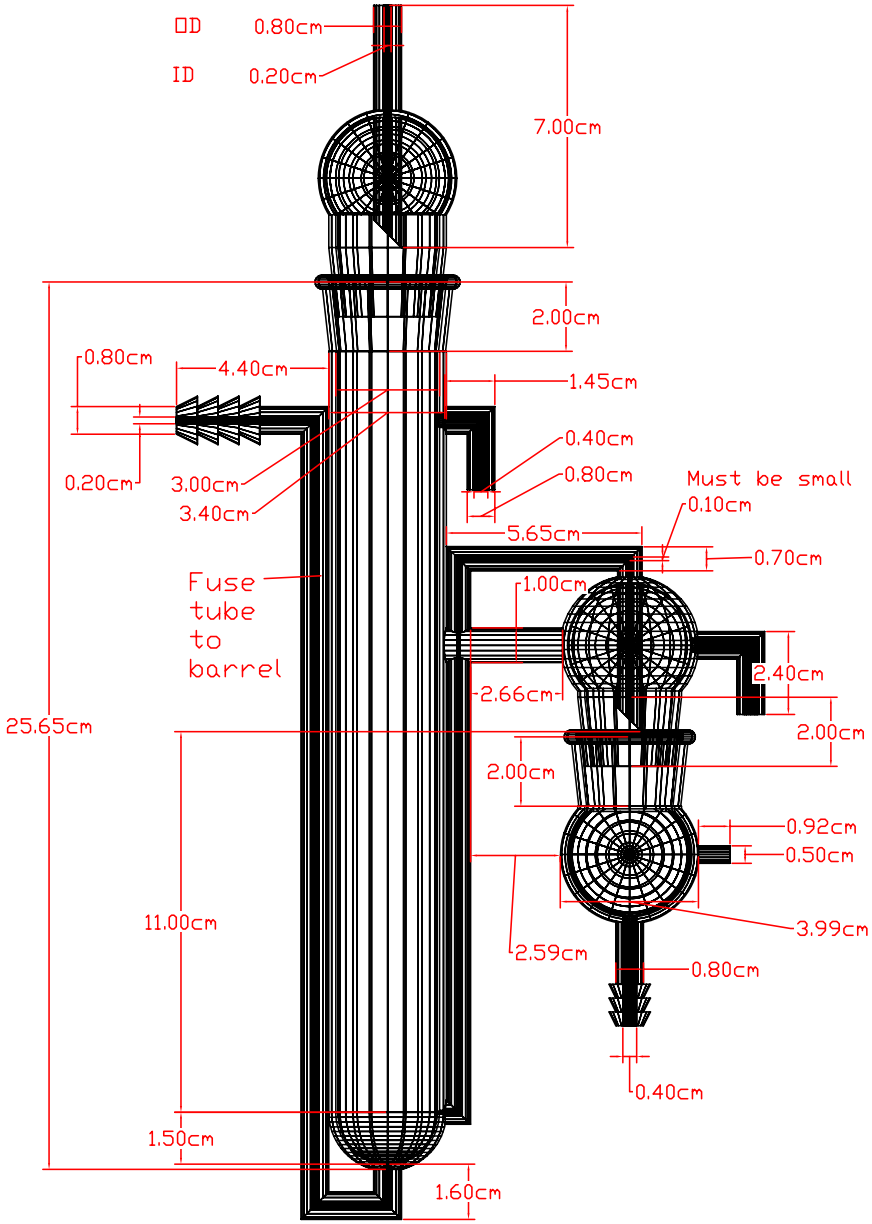
OD
0.80cm
ID
0.20cm
7.00cm
2.00cm
0.80cm
4.40cm
1.45cm
0.40cm
0.80cm
0.20cm
3.00cm
3.40cm
Must be small
0.10cm
5.65cm
0.70cm
Fuse tube to barrel
1.00cm
2.40cm
2.66cm
25.65cm
2.00cm
2.00cm
0.92cm
0.50cm
11.00cm
3.99cm
2.59cm
0.80cm
0.40cm
1.50cm
1.60cm

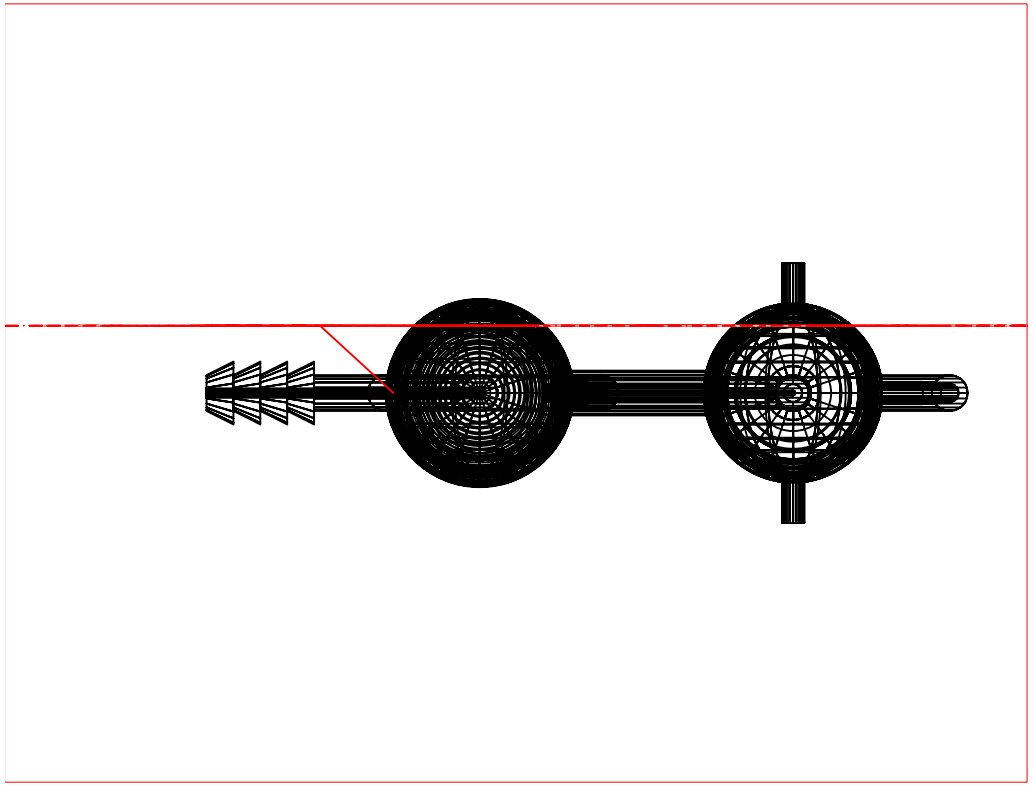

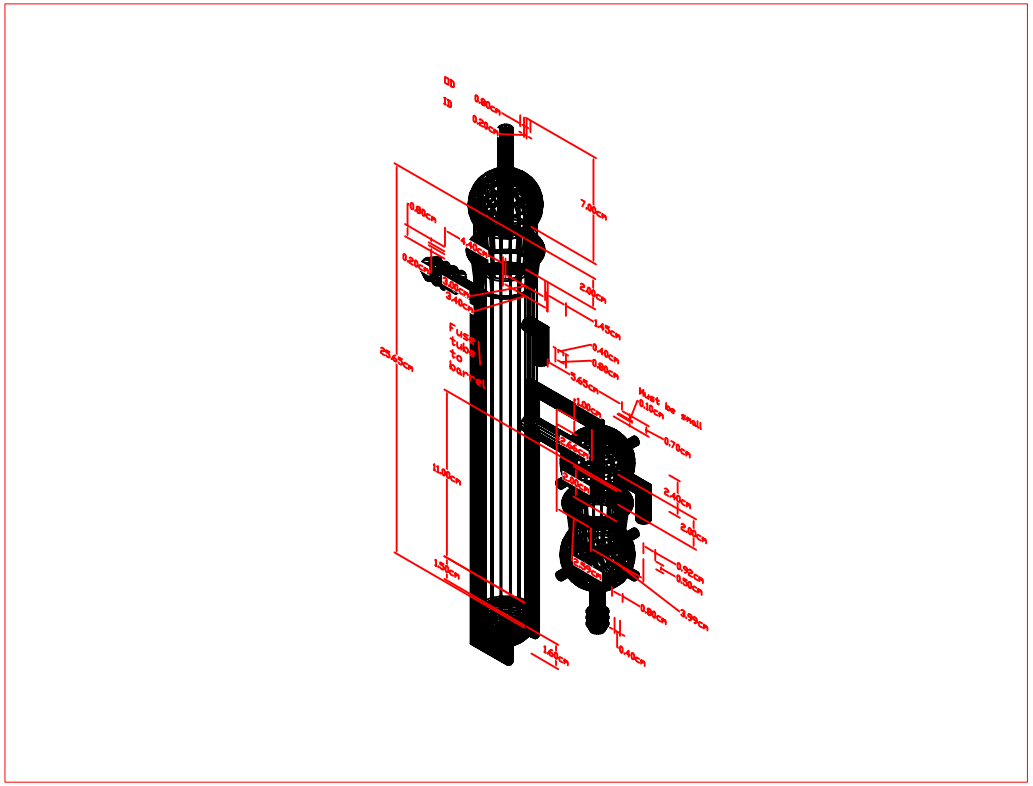
OD
ID
0.80cm
0.20cm
7.00cm
2.00cm
1.45cm
0.40cm
0.80cm
5.65cm
Must be small
0.10cm
0.70cm
2.40cm
2.00cm
0.92cm
0.50cm
3.99cm
0.80cm
0.40cm
1.60cm
1.50cm
11.00cm
25.65cm
Fuse tube to barrel

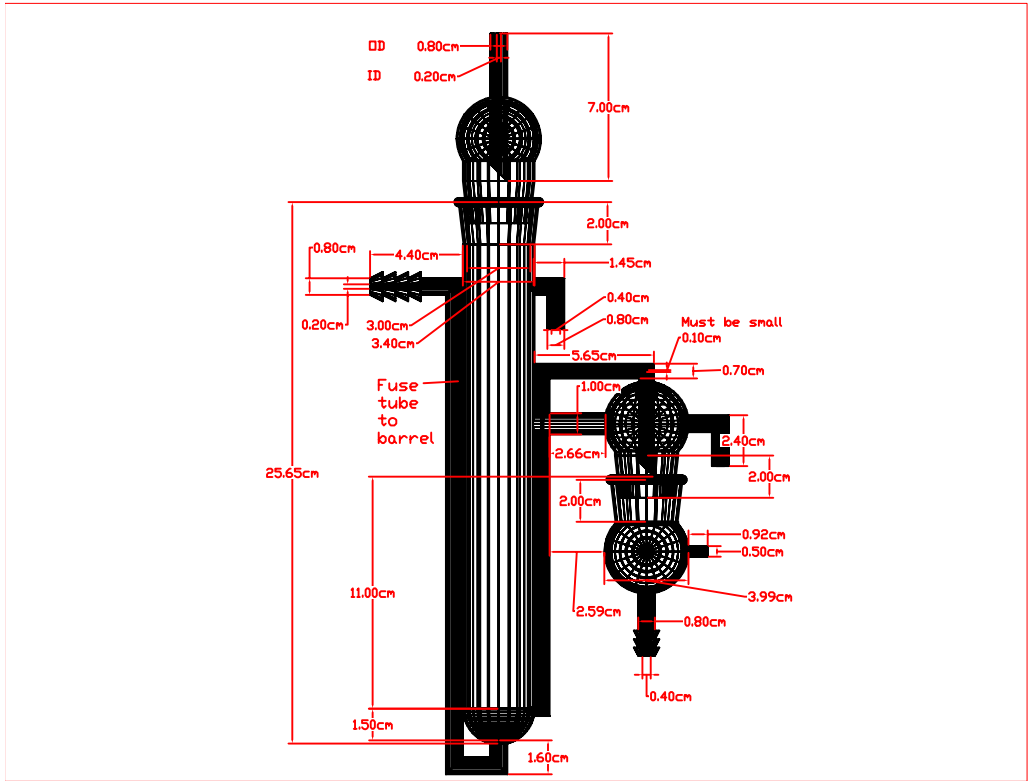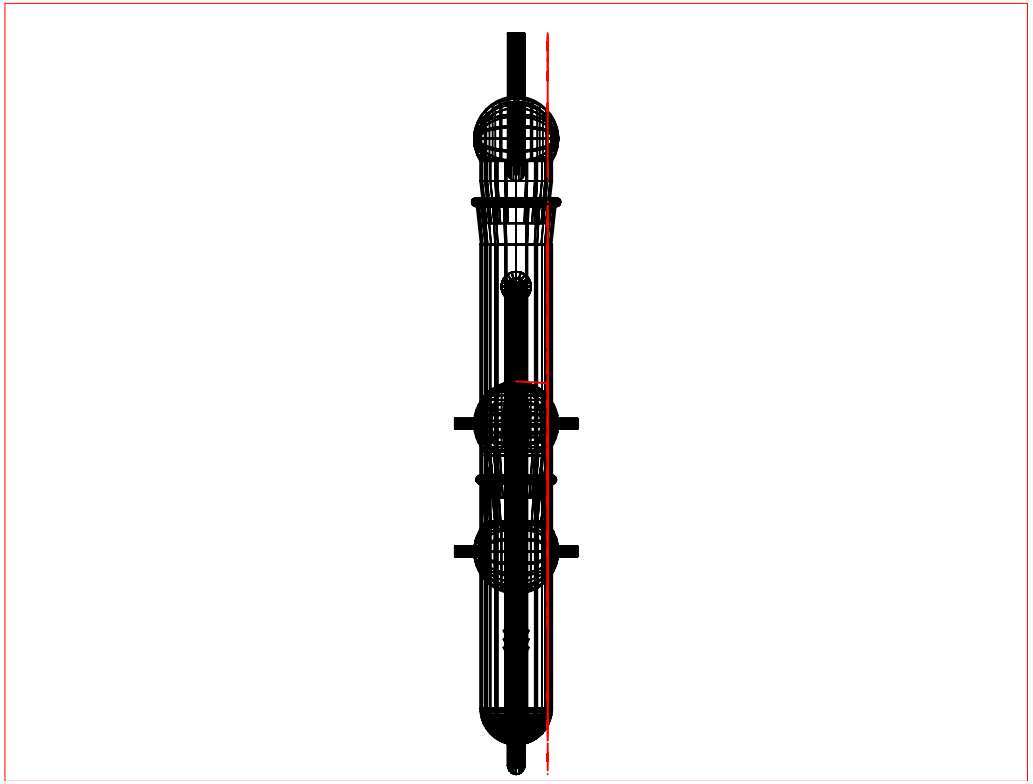
OD 0.80cm
ID 0.20cm
7.00cm
2.00cm
0.80cm
4.40cm
1.45cm
0.40cm
0.80cm
0.20cm
3.00cm
3.40cm
Must be small
0.10cm
5.65cm
0.70cm
Fuse tube to barrel
1.00cm
2.66cm
2.40cm
2.00cm
2.00cm
25.65cm
0.92cm
0.50cm
11.00cm
3.99cm
2.59cm
0.80cm
0.40cm
1.50cm
1.60cm