4-H TRACTOR PROGRAM

4

FOURTH AND ADVANCED YEARS

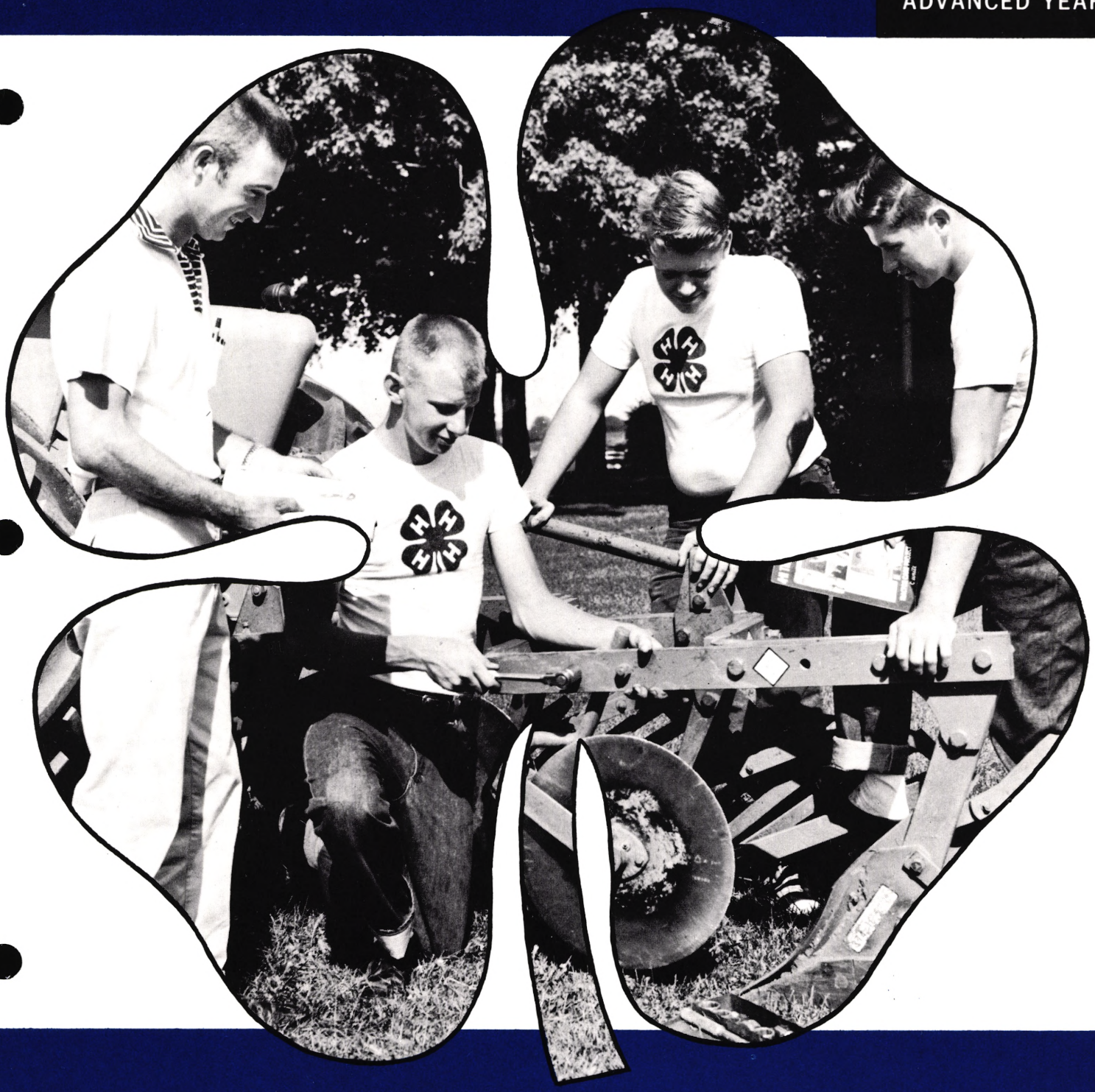

MACHINERY CARE AND SAFETY

THE 4-H TRACTOR CARE AND SAFETY PROGRAM

FIRST YEAR — TRACTOR PROJECT

Units

1. Learning How to Be Safe
2. What Makes an Engine Run
3. Nuts, Bolts, Screws, and Rivets
4. The Instrument Panel
5. Controls for Your Tractor
6. Daily Maintenance and Safety Check
7. Starting and Stopping Your Tractor
8. Clean Air for Your Engine
9. Periodic Lubrication and Maintenance

SECOND YEAR — TRACTOR PROJECT

Units

1. Tractor Safety on the Farm
2. Oil for the Engine
3. Mixing Fuel and Air
4. Battery Service and Spark Plugs
5. Cooling Systems for Engines
6. Care of Tires
7. General Lubrication
8. Tractor Records and Operating Costs

THIRD YEAR — TRACTOR PROJECT

Units

1. Tractor Safety on the Highway
2. Engine Ignition Systems
3. Hitches, PTO, and Hydraulic Controls
4. Steering, Brakes, and Front Wheels
5. Valves and Valve Service
6. Power Transmissions
7. Winter Care and Trouble Shooting
8. Tractor Records and Ownership Costs

FOURTH AND ADVANCED YEARS — MACHINERY PROJECTS

Units

1. Safe Use of Farm Machinery
2. Transmitting Power
3. Tools For Breaking The Soil
4. Applicators For Chemicals
5. Servicing Seed Planters
6. Cutters for Crops
7. Seed Separation
8. Farm Machinery Management

This educational material has been prepared for 4-H Club use by the National 4-H Tractor Program Development Committee, composed of representatives of the State and Federal Extension Services, the National 4-H Service Committee, and the National 4-H Tractor Program Donors.

The 4-H Tractor Program is conducted by the Extension Services of the State Agricultural Colleges, with the United States Department of Agriculture cooperating. It is arranged and announced by the National 4-H Service Committee.

"Cooperative Extension Work in Agriculture and Home Economics. College of Agriculture, University of California and United States Department of Agriculture Co-operating. Distributed in Futherance of the Acts of Congress of May 8, and June 30, 1914. George B. Alcorn, Director, California Agricultural Extension Service."

17-5-63

© 1963 NATIONAL 4-H SERVICE COMMITTEE, INC.
CHICAGO, ILLINOIS

4-H TRACTOR PROGRAM

FOURTH AND ADVANCED YEARS

FARM MACHINERY CARE AND SAFETY PROJECT

This is the fourth and last of a series of project books in the 4-H Tractor Program. In the First, Second, and Third Year projects you learned about tractor care and safety. Now you can continue your enrollment in the 4-H Tractor Program by learning about the care, operation, and safe use of the machinery on your farm.

It is not intended for you to try to complete the entire Fourth Book in one project year. Divide it into two or more years of project activity according to the machines on your farm. Take your time and do the jobs thoroughly.

You will find some challenging jobs waiting for you in this, the advanced phase, of the 4-H tractor program. At the same time you can continue keeping records on your tractor, using the forms provided in Unit 8.

It is expected that you will select one or more machines on your farm when you do each job outlined in the lessons. For instance, if you do the unit on transmitting power, you may need several different implements to represent all the ways that power is transmitted. If you learn how to adjust and take care of chains, belts, gears, slip clutches, etc. on one machine, you will then know how to take care of these parts on other machines. If you learn how to check the rate of planting on one machine, you should then be able to apply what you learned to other seed planters on your farm. If you have several implements to work on, you may want to repeat a lesson and work on more machines.

Equally important with care and safety of your equipment is the 4-H goal of helping you to become a better citizen in your community. The training you receive in your 4-H work will be beneficial to you throughout your lifetime.

Take time to read carefully the informative material in each unit. Go through the work sheets slowly and carefully, and complete the demonstrations and jobs outlined. The greater the interest and effort you give to your 4-H project, the greater will be its reward to you.

Ask your leader about Unit 8 on record keeping and farm machinery management. He may want you to start on this unit right away.

DETAILS ABOUT WHAT YOU DO ARE ON THE FOLLOWING PAGES

Good Luck! _____

Note: In completing your 4-H Tractor Project at the close of the club year it is suggested that you submit only the following pages:

Member's Summary (page 3)

Completed Work Units (the yellow sheets)

Completed Check-Up Sheets (the blue sheets)

My Achievements and Experiences (in back of book)

This is my 4-H Tractor Book

.....

4-H FARM MACHINERY CARE AND SAFETY PROJECT
FOURTH AND ADVANCED YEARS

WHAT TO DO

Your 4-H Tractor Program has four parts. The First-Year Project lets you get acquainted with your tractor and learn about the importance of tractor safety. The Second and Third Year Projects cover tractor care and safety. The Fourth book covers machinery care and safety. It can be divided into two or more project years according to the machines you have on your farm.

Safety is always important. That's why it is included in all four books.

For each year's project there is a booklet like this one. This booklet and your Operator's Manual will give you the answers to most of your questions. The white sheets in each unit give you correct general information and are illustrated with drawings to help you. Read each paragraph carefully. Study your Operator's Manual and put into practice what you learn by actually working with a tractor.

On the yellow work unit sheets, record the jobs that you finish. The more jobs you do, the more you will enjoy this work. There are also some questions for you to answer.

Be sure to answer all of the work unit questions that apply to your tractor. Some of the questions are about diesel and propane tractors. If you find the information in the white sheets, fill in the answers. If you are not working on a propane or diesel engine, and the answer isn't given in the white sheets, you don't need to answer the questions.

Be sure to answer the blue check-up sheets. All you have to do is put the letter for the correct answer at the right of the page. Be on your toes. Read each question carefully before giving your answer.

YOUR RECIPE FOR SUCCESS

Keep your records up to date as you complete each work unit. There are honors and awards for those who do the best work. You will want to do some of the following in addition to filling out the work units:

Give demonstrations and talks on tractor care and safety.

Take part in local and county tractor operators' contests.

Encourage other boys to enroll in the club.

Become a junior leader and help your leader to assist others or younger members.

Practice what you learn on your tractor at home. Remember, you should know the "why" as well as "how."

Submit only the Member's Summary, Work Units, Members' Check-Up Sheets, and story in this book to complete your project and club year. Do not submit the entire book.

HONORS AND AWARDS

The top four winners in the 4-H Tractor Program in your county can receive gold medals. The state winner in your state receives an all-expense trip to the National 4-H Congress in Chicago. You may even win one of the $500 scholarships that are awarded to national winners. In addition, you can receive honors and awards in tractor operators' contests or for demonstrations you give or exhibits you make.

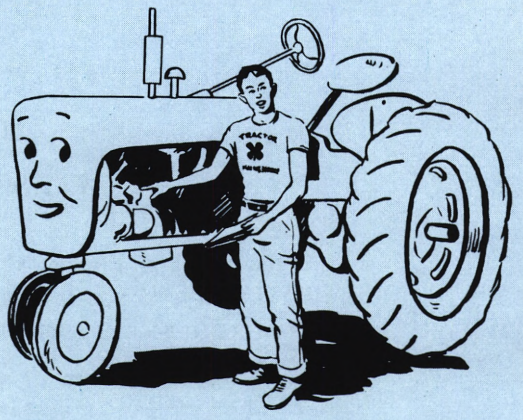

Fig. 1 Learning by demonstrating.

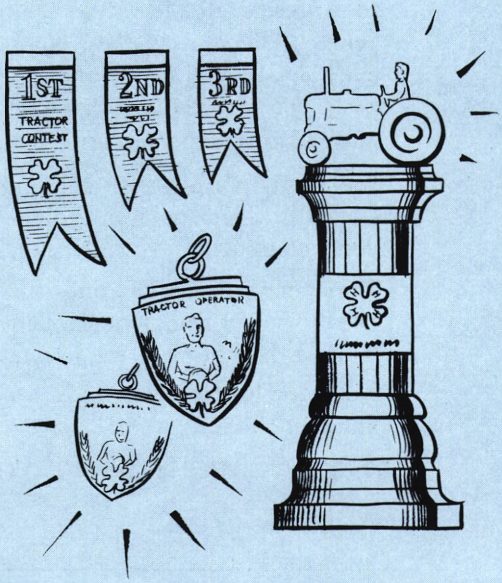

Fig. 2 Awards for 4-H achievements.

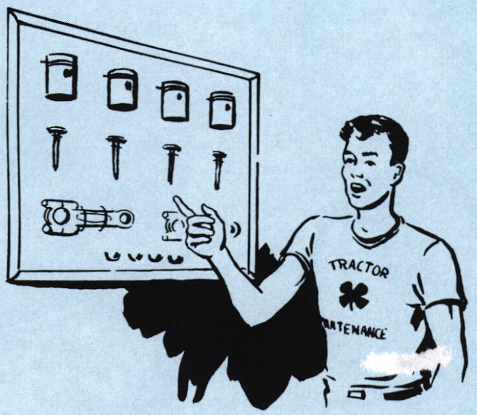

Fig. 3 Display of damaged parts.

MEMBER'S SUMMARY

FOURTH AND ADVANCED YEARS

FARM MACHINERY CARE AND SAFETY PROJECT

Name _____ Age _____ Years in 4-H _____

Address _____ County _____ State _____

Name of Club _____ Name of Leader _____

Date and Place of Meetings	1. Safe Use of Farm Machinery	2. Transmitting Power	3. Tools for Breaking the Soil	4. Applicators for Chemicals	5. Servicing Seed Planters	6. Cutters for Crops	7. Seed Separation	8. Farm Machinery Management	
1. _____									
2. _____									
3. _____									
4. _____									
5. _____									
6. _____									
Date meeting held									
Did you attend?									
Date work unit completed									
Date check-up sheet completed									

DEMONSTRATIONS: Where? When? Topic? _____

_____

_____

_____

TRACTOR OPERATING CONTESTS: Date? Where? Placing? _____

_____

_____

OTHER EVENTS: Exhibits, Tours, etc. _____

_____

_____

_____

FOURTH AND ADVANCED YEARS

4-H FARM MACHINERY CARE AND SAFETY PROJECT

COMPLETED _____ _____
(Date) (Signature of member)

COMMENTS OF CLUB LEADER

_____

_____

_____

_____

_____

_____

_____

_____

Date _____ _____
(Signature)

COMMENTS OF COUNTY EXTENSION AGENT

_____

_____

_____

_____

_____

_____

_____

_____

_____

Date _____ _____
(Signature)

SAFE USE OF FARM MACHINERY

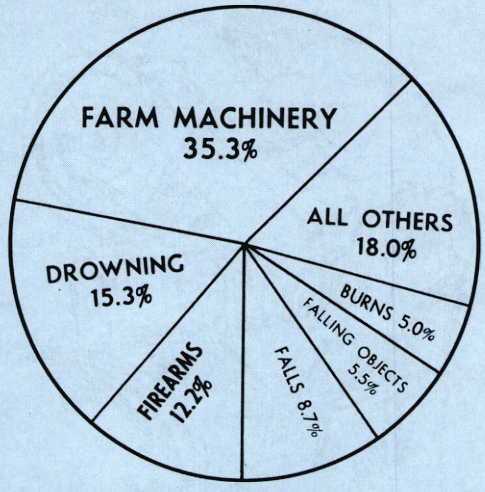

Fig. 1 More than one-third of the accidents among the farm population involve farm machinery.

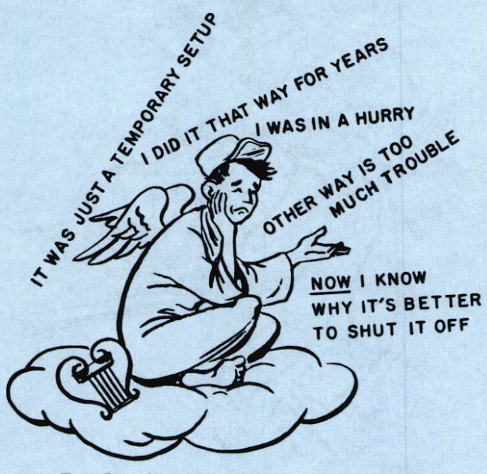

Fig. 2 Alibis don't excuse accidents.

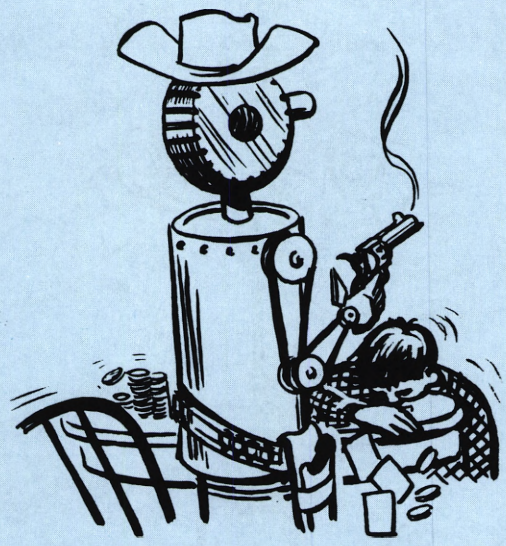

Fig. 3 You are betting your life in a game of chance with your machine.

Fig. 4 Following this one rule would eliminate most farm machinery accidents.

Farming is classified as a dangerous occupation. In fact, it is estimated that farming has a higher accident rate per man hour than any occupation in industry. This may seem strange when, by comparison, some of the machines used in factories are more dangerous than farm machines. It is the conditions under which they are used that makes the difference. A factory worker uses the same machine every day and follows a standard routine that includes all necessary precautions. On the other hand, farming methods and machines are constantly changing. Other than the tractor, each of the machines is used only a few days a year, and the operator never gets a chance to establish a routine that lets him work with his machine with complete safety. As an operator of farm machines, you have to make up for these shortcomings with your ability to reason out a method for using your equipment with complete safety. In other words you will have to establish some hard and fast rules for being safe — and then follow them completely at all times.

THE FACTS

A report by the United States Department of Agriculture tells us that each year about 1 out of every 5 of our farm population has an accident serious enough to cause time loss from the job. One person in 33 suffers a serious accident resulting in a disabling injury. One in 1,600 ends up a fatality. In each of these groups, accidents with farm machinery account for approximately one-third of the total, making this by far the most frequent cause of accidents involving our farm population.

WHAT CAUSES ACCIDENTS?

Have you ever tried to answer this question? Perhaps you have at some time hit your finger with a hammer or suffered some other minor injury. Do you remember how it happened? Were you in a hurry? Maybe you were hurt because of someone else's carelessness.

Many different surveys have been made to find out why accidents happen. In nearly every case the results are similar to the following summary:

Cause of accident	*Percent of total*
Unavoidable (lightning, or other forces of nature)	2-4
Use of faulty equipment	10
Carelessness (includes all human factors)	86-88

As you can see from this table there really isn't much excuse for an accident.

YOU ARE NO MATCH FOR A MACHINE

Any moving part of any machine, whether it be a pulley, blade, sprocket, belt, shaft, gear, chain, knife, hammer, or otherwise, is faster and more powerful than you are. The high-speed blade of a power lawn mower is capable of cutting off your toes even though it is powered by a very small engine. And a shaft that appears to be turning slowly can grab your clothes and wrap you up before you can make a simple move to avoid the accident.

SHUT IT OFF!

This is the most important rule of all. Whether a machine is simple or complex, and regardless of its size, speed, or power—always shut it off before working on it. It is the only sure way you can avoid getting into trouble with a machine. If you shut off the power before working on a machine for any reason, you will at least know that you are doing the job safely even though it may take a little longer.

SAFE USE OF FARM MACHINERY

If you have a PTO-driven machine you need to be alert to the possibility that the machine will coast for a while after you have disengaged the power shaft. This is particularly true for a machine such as a baler or forage chopper. Always allow plenty of time for the machine to come to a complete stop before you open a cover or attempt to work on it.

KEEP SHIELDS IN PLACE

Shields are intended to be used on moving parts of machines to protect the operator. Sometimes it is tempting to leave off a shield to make it easier to adjust or repair the machine. But this is a dangerous practice that can lead to an accident. Give your machinery a careful inspection and see where shields are missing. Replace all missing shields if they are available. If you don't have the shield or can't get one from your dealer perhaps you can make one.

DRESS PROPERLY

An almost unbelievable number of accidents happen because of loose or improperly fitting clothing. It only takes a small string caught in a gear or shaft to cause a serious accident. Be especially careful of gloves, sleeves, and pant legs.

AVOID FATIGUE

If you work when you are overly tired, you are inviting an accident. You will do things that you would normally never do if you were properly rested. There are a few things that can be done to avoid fatigue even when you know that you will have to work long hours. Eat a balanced diet. Take along, or have someone bring you, a snack to eat between meals, in the middle of the morning and afternoon. If possible, let someone else operate the machine for a while, even if only for a short time, to give you a rest. Fatigue is listed as a major cause of accidents.

OTHER GOOD SAFETY RULES

Following are some good safety rules that apply to many different machines used on your farm. As you read this list, be thinking of some others that apply to your machines at home. There is a place in the yellow work unit sheet to add to this list.

1. *Set tractor wheels out*—this is an important rule to help prevent tipping accidents.
2. *Always set the brakes*—before leaving the tractor seat, be sure the brakes are set. This may prevent an implement from running over you.
3. *Don't use a stick or other object to unclog a machine* unless you have first shut off the machine.
4. *Keep equipment adjusted*—well-adjusted equipment will save a lot of lost tempers and prevent accidents.
5. *Watch out for others*—always make sure other people, especially children, are kept away from the area where machinery is working.

NOW IT'S UP TO YOU

Throughout the 4-H Tractor Program you have had a chance to learn how accidents are caused and how they can be prevented. Remember that an accident can happen under one or both of two conditions: When you commit an unsafe act, or when you allow an unsafe condition to exist. Your farm is only as safe as you make it—as safe as you think and act. No matter how much you have learned about safety, it doesn't help unless you put what you know into practice. And you are the only one who can make this decision. Start right now—pledge yourself to safe operation of your farm machinery.

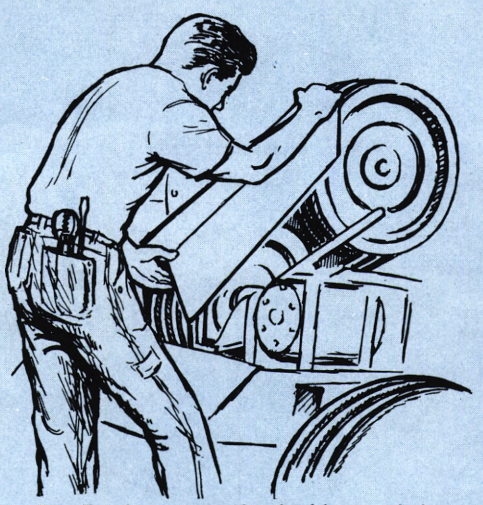

Fig. 5 Always use the shields provided with your equipment.

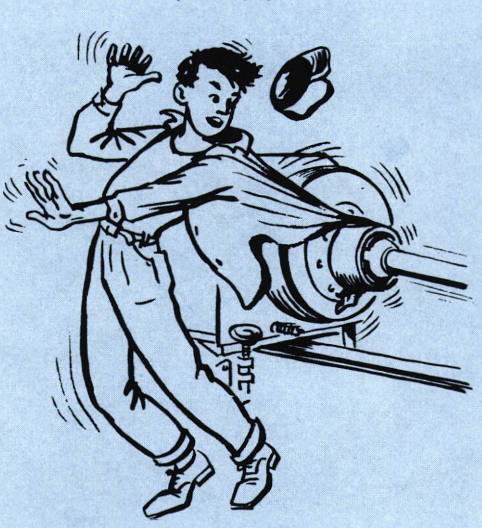

Fig. 6 Loose-fitting clothes are a hazard.

Fig. 7 Take a break!

"JOIN ME IN A PLEDGE FOR SAFE OPERATION OF EQUIPMENT"

Select one of the larger, power-driven machines on your farm for this unit. A cotton picker, beet harvester, potato digger, corn picker, combine, forage chopper, or baler, would be a good one to use. You will need your Operator's Manual to help you with this unit. Eliminate all hazards.

1. Check all of the shafts that require a shield. How many are needed? _____

   How many were missing? _____ Which ones? _____

   _____

   Could any of the missing shields have caused an accident? _____

   Why? _____

   _____

2. Now check all places where guards are needed to cover gears, sprockets, pulleys, belts, chains, etc. How many are needed? _____ How many were missing? _____

   Which ones? _____

   _____

   Could any of the missing guards have caused an accident? _____

   Why? _____

   _____

   _____

3. List any places on the machine that are not normally covered with a shield or guard but might cause an accident (the cutter bar of a combine, for example). _____

   _____

   _____

   How can you make sure none of these places will cause an accident? _____

   _____

   _____

4. Is it necessary to wear close-fitting clothes when operating this machine? _____

   Why? _____

   _____

(Over)

5. Make a list of the accidents that you think are most likely to happen while you are operating this machine. In each case tell how the accident can be prevented.

	Possible accident	How it can be prevented
a.	_____	_____
b.	_____	_____
c.	_____	_____
d.	_____	_____
e.	_____	_____
f.	_____	_____

6. If, while being operated, this machine becomes plugged, tell how you could safely correct the trouble.

_____

7. List some other machines on your farm and tell what might be hazardous about their use. Then tell how you can operate them safely.

	Machine	Precautions to take
a.	_____	_____
		_____
		_____
b.	_____	_____
		_____
		_____
c.	_____	_____
		_____
		_____
d.	_____	_____
		_____
		_____

8. List some rules for the safe operation of all the machines on your farm.

a. _____ c. _____

b. _____ d. _____

Note: Fill out this work unit, using your own machinery at home. Be ready to discuss your experiences with other 4-H members at your next club meeting.

MEMBERS' CHECK-UP

FOURTH BOOK UNIT 1 **SAFE USE OF FARM MACHINERY**

Place the letter for the correct answer at the right of the page.

1. Farm machinery is involved in (A—10) (B—20) (C—35) percent of the accidents involving the farm population. _____

2. It has been estimated that (A—50) (B—30) (C—over 80) percent of accidents are due to plain carelessness. _____

3. Your first reaction in the case of an emergency (A—may require as long as 1 second or more) (B—is usually less than ½ second) (C—is to do nothing). _____

4. On the basis of the accident rate per man-hour, it is safer to (A—work in a factory) (B—work on a farm). _____

5. A tractor with a wide front end is (A—more) (B—less) likely to tip than a tricycle type tractor. _____

6. Accidents happen to approximately (A—20) (B—10) (C—40) percent of our farm population each year. _____

7. Many accidents with farm machinery happen when (A—the machine reaches out and grabs the operator) (B—the operator starts tinkering with the machine while it is running.) _____

8. It is estimated that faulty equipment is a factor in (A—2) (B—24) (C—10) percent of the accidents with farm machinery. _____

9. When getting ready to operate power-driven equipment, the first step is to (A—start it up and see if it still runs) (B—be sure all of the shields and guards are in place) (C—check the speed of the PTO). _____

10. Safe operation of farm machinery is (A—impossible) (B—a matter of pure chance) (C—a matter of making up your mind to be a safe operator). _____

Note: This Check-Up Sheet is intended to test what you have learned and to stimulate discussion with the other members. The more you discuss these questions with your leader and the other members the more you learn.

TRANSMITTING POWER

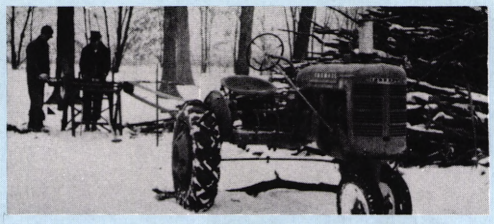

Fig. 1 Tractor power can be used to drive belts.

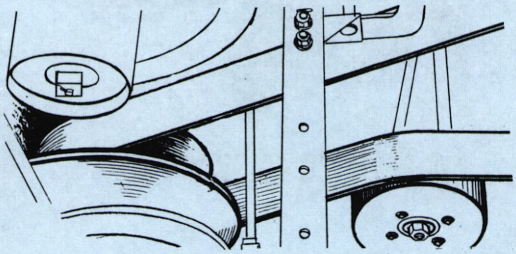

Fig. 2 Flat belts . . .

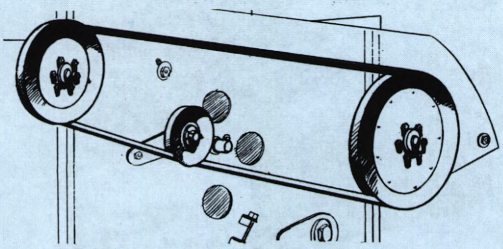

Fig. 3 V-belts . . .

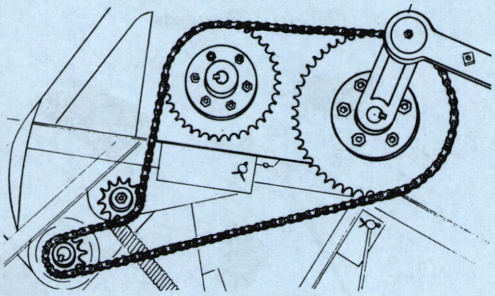

Fig. 4 Chains . . .

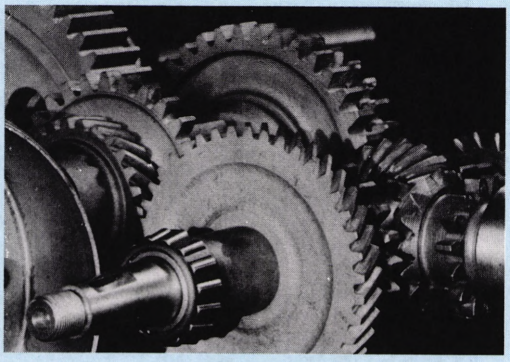

Fig. 5 . . and gears are all used to transmit power.

Machines need power to turn shafts, fans, cylinders, and many other moving parts. We get power to operate machines from the tractor power-take-off and from the belt pulley. We get power from engines mounted on implements. We may also get power from drive wheels that run on the ground as the machine moves.

Power is transmitted by flat belts, V-belts, chains, gears clutches, shafts, and also by hydraulic pressure. If we need a great deal of turning force (or torque), we don't change the power — we cut down on the speed of the driven part. We do so by using small gears, sprockets, or pulleys to drive larger gears, sprockets, or pulleys. If we want less torque at higher speeds we use larger gears, sprockets, or pulleys to drive smaller ones. There is always some friction loss when power is transmitted through gears, belts, and so forth.

In order to keep machines running efficiently it is important that we understand how to service, lubricate, and adjust the power transmission devices.

PROPER SPEED IS NEEDED FOR EFFICIENT OPERATION

One of the first things to understand when working with a machine is how to make sure that it is running at the proper speed. You will sometimes want to change the size of sprocket wheels or gears; if you do, remember that all you need to do to determine how fast a part will run is to count the number of driving teeth and compare this figure with the number of driven teeth.

When power is transmitted by belts it is often necessary to change pulleys to obtain the proper speed. Some pulleys for V-belts are adjustable for changing speed. You can change the effective diameter of the pulley by moving one half of the sheave in or out with respect to the other. This is done by inserting or removing spacer disks between the two halves, or by means of special levers, or by screwing one half of the sheave toward or away from the other half.

MEASURING A PULLEY

When working with pulleys for flat belts you can determine the speed by measuring either the diameter of the pulley or the distance around it. Because pulley size is given in diameter, we usually measure the diameter of a pulley when checking the speed of a machine.

When measuring the diameter of a pulley, lay two straight pieces of wood or metal across the highest part or crown of the pulley, and measure the distance between the pieces to obtain the diameter. The speed of the driving pulley times its diameter is equal to the speed of the driven pulley times the diameter of the driven pulley. Here is an example: The speed of a pulley 14 inches in diameter is 800 rpm. This pulley is driving another pulley 8 inches in diameter. How fast will the smaller pulley turn?

$$800 \times 14 = ? \times 8 \qquad \frac{800 \times 14}{8} = 1{,}400 \text{ rpm}$$

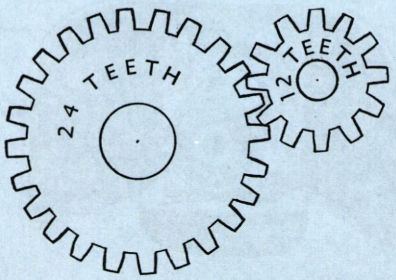

Fig. 6 Speeds of gears can be figured by counting teeth.

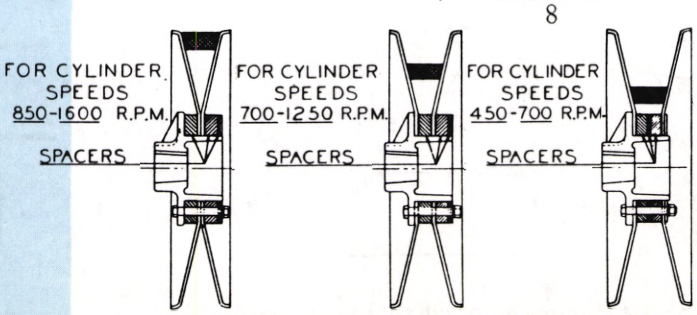

Fig. 7 This V-belt pulley can be adjusted.

Fig. 8 Measuring a pulley.

TRANSMITTING POWER

When determining the pulley ratio for V-belts, measure the outside diameter of each pulley and subtract the thickness of the belt. The ratio of these two numbers gives you the speed ratio. (This works only when the belt is running nearly flush with the top of the pulley.) For example: What is the speed ratio between a 3-inch pulley and an 8-inch pulley using a ½-inch belt?

$$8'' - \tfrac{1}{2}'' = 7\tfrac{1}{2}''$$
$$3'' - \tfrac{1}{2}'' = 2\tfrac{1}{2}''$$
$$\text{ratio} = \frac{7\tfrac{1}{2}}{2\tfrac{1}{2}} = 3$$

In other words, the speed of the smaller pulley is just three times the speed of the larger.

POWER-TAKE-OFF HITCHES

When implements are pulled by the tractor and, at the same time, are being driven by the power-take-off shaft, proper and safe hitching is more difficult. Sometimes operators connect machines and tractors not built to work together. These makeshift arrangements are often dangerous. Tractors and machines driven by PTO have been standardized. Standard PTO speed is either 540 or 1,000 rpm. Standard PTO 6-splined shaft sizes for the older 540 speed are 1⅜ or 1¾ inches, depending on the size of the tractor. The 1,000 rpm shaft has 21 splines. Fig. 13 shows the proper dimensions for PTO hitches as follows:

A. The hitch point on the tractor drawbar for 540 rpm operation should be 14 inches behind the end of the tractor power shaft. For 1,000 rpm it should measure 16 inches.
B. The power shaft should be 6 to 15 inches above the drawbar.
C. The drawbar should be 13 to 17 inches above the ground.
D. A master shield should be fastened over the tractor power shaft and attached to the implement shield.

Follow these recommendations. If you buy a used combine or tractor different from the one formerly used, check the hitch and power-take-off to make sure they are the proper length. Have the proper size of coupling. See that safety shields can be attached.

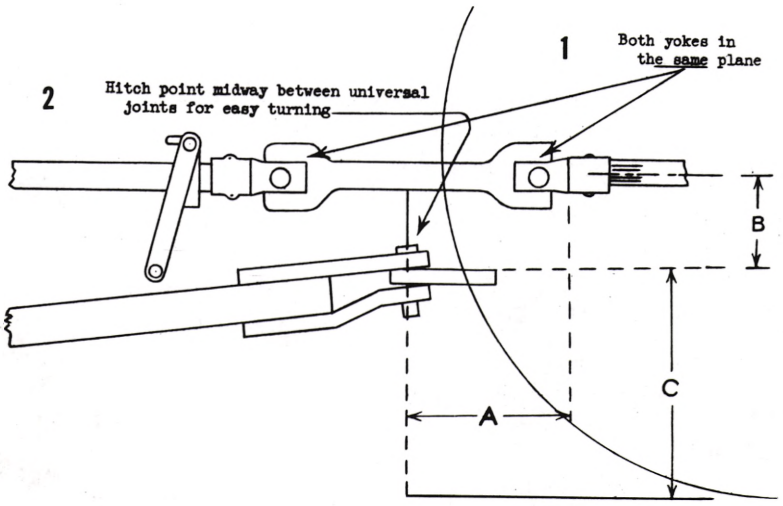

Fig. 13 Standardized hitch with PTO.

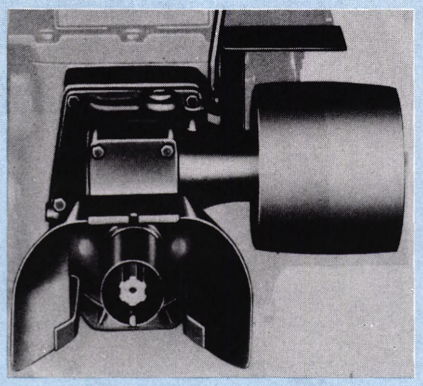

Fig. 9 Most tractors have two power connections—PTO and belt pulley.

Fig. 10 There are two standard PTO speeds.

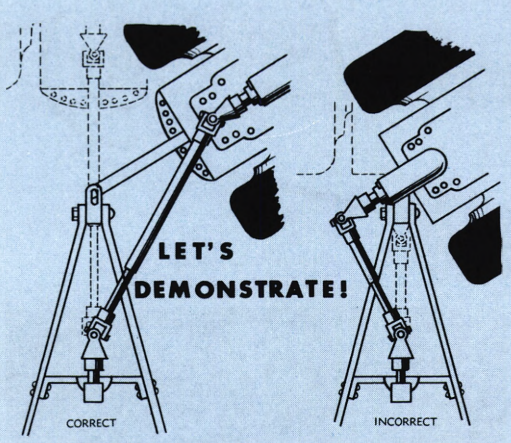

Fig. 11 How to hitch your PTO (shows what happens when you turn).

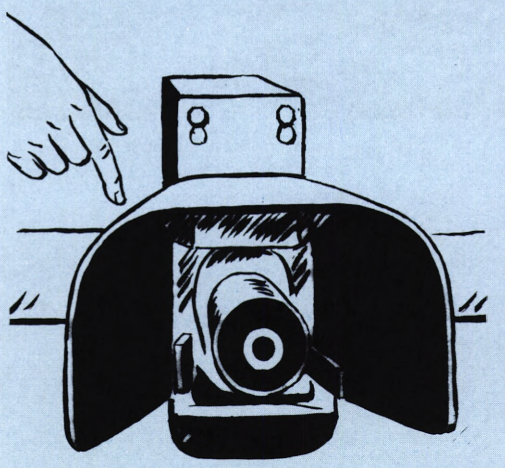

Fig. 12 Always see that safety shields are attached when using PTO.

TRANSMITTING POWER

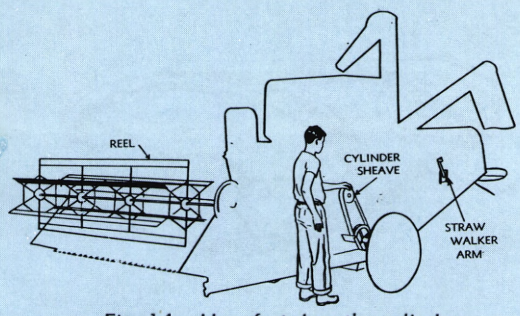

Fig. 14 How fast does the cylinder on your combine turn?

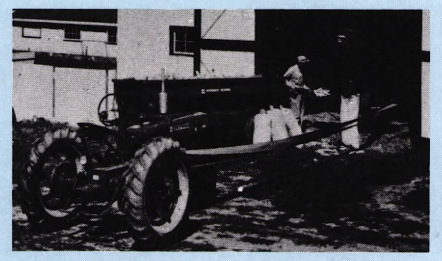

Fig. 15 Putting a twist in the belt reverses direction.

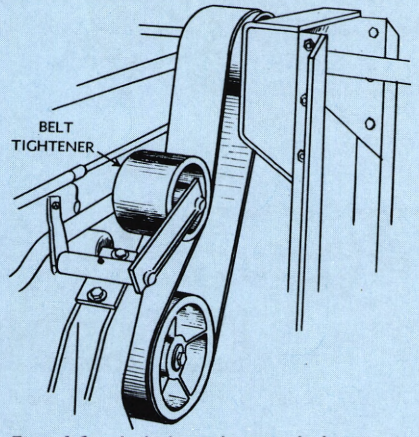

Fig. 16 A belt tightener helps to increase belt pull. This one is also a clutch.

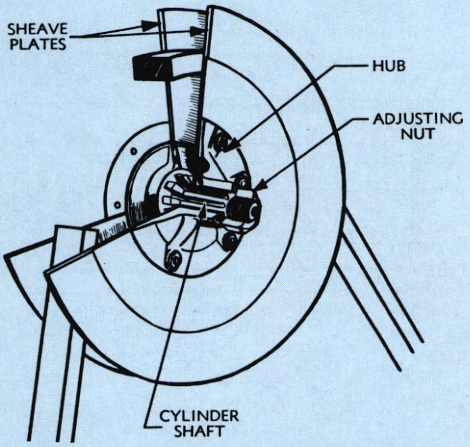

Fig. 17 This pulley can be adjusted for different speeds by turning a nut.

Fig. 18 Triple V-belt — a matched set.

CHECKING SPEED

Suppose you wanted to find out how fast the cylinder on your combine turns. All you need is a pocket watch with a second hand.

1. Turn the combine cylinder by hand and count the number of turns required to make the reel turn once or a straw walker arm to make one shake.
2. Run the combine at governed speed and count the turns the reel or straw walker makes in one minute.

Suppose the combine cylinder turned 30 times for one turn of the reel. You find the reel turns 35 times in a minute. Now $30 \times 35 = 1{,}050$ turns or 1,050 rpm for the cylinder. Easy, isn't it?

FLAT BELTS

Flat belts are often used for transmitting power between shafts. Belts offer an economical method of power transmission. If the machine jams they will slip off. Such action is often desirable to protect the machine. Most flat belts are made of rubber. If a flat belt is used for the main drive it should have a vulcanized splice. The smooth side of the belt should be run next to the pulley. The belt should be kept tight and clean. A few drops of castor oil (don't use petroleum oil because it damages rubber) will help keep a rubber belt soft and clean. The oil will also help prevent slippage. Main drive pulleys are often covered with belting material to prevent slipping.

Where big power is transmitted with flat belts, long belts are used to get more uniform tension and pull on the pulley surfaces. To get more pulley contact, sometimes the belts are twisted. Putting a twist in the belt also reverses the directon of rotation. Belt tighteners may be used to give more pulley contact. Where an idler pulley is used as a clutch, it tightens the belt when power is to be applied.

We use a simple formula for estimating the power a flat belt will deliver. Multiply the speed in feet by the width in inches and divide by 1,000. For example, the speed is 3,100 feet per minute and the belt width is 8 inches. $\frac{3{,}100 \times 8}{1{,}000} = 24.8$ horsepower. To get the most out of a belt it should be operated at high speed.

V - BELTS

V-belts cause much less trouble than flat ones in transmitting power. Since V-belts contact the sides of the sheave grooves, they provide more belt presure with less pull on the shaft bearing and have greater contact area per unit of belt width than a flat belt. V-belts can also be used with adjustable pulleys for speed changes.

There is no simple way of estimating the power a V-belt will deliver. However, the manufacturers have tables for selecting belts to fit power requirements. Remember that power is a result of speed and torque. Even the smaller belts on large-diameter pulleys running at high speeds will transmit a lot of power. Some of the largest drives are made of many matched belts running side by side. Because of the way V-belts are manufactured, it is important to have new belts matched to the same length when they work together. Otherwise the shorter belts are overworked, are easily worn, and eventually cause trouble by not doing their share.

TRANSMITTING POWER

V-belts should also be kept clean. As they wear and ride deep in the groove of the pulleys they should be replaced. On some pulleys the sheave can be adjusted. In general a V-belt should be flush with the top of the pulley.

When you need to replace a V-belt, make sure you have plenty of slack. Don't force a V-belt over a pulley. Remove the pulley, put on the belt and then slide the pulley onto the shaft.

CHAINS

Chains have the advantage of providing a positive drive. If there is danger of breakage should the machine jam, the drive will usually have a slip clutch or shear pin.

Detachable chains are commonly found on farm machinery and are well adapted to light loads and slow speeds. For higher speeds and loads, roller chains are often used. There are also chains with special lugs or flanges for attaching flights or cleats. Chains with lugs are commonly used on machines such as the corn picker for guiding stalks into the snapping rolls.

Chains are made in many different sizes and are numbered accordingly. The smaller the number the lighter the chain. A number 45 and number 55 detachable chain have the same pitch diameter; but the number 55 chain is made from much heavier material.

There are several things to watch in maintaining long chain life. The sprockets should be in line. If a sprocket becomes worn it must be replaced. Whenever you put on a new sprocket, always use a new chain. A badly worn sprocket will cause the chain to wear rapidly. A new sprocket and old chain is also undesirable.

It is usually best to run detachable chains with the link hook or barrel forward (the link slot is always to the outside). This distributes wear more evenly between chain and sprockets. On conveyor or elevator chains where you have a long chain and ample means for taking up slack, the chain is often run with the closed ends of the links forward. Since detachable link chains may run in either direction it is well to examine your machine and note which way the chains run.

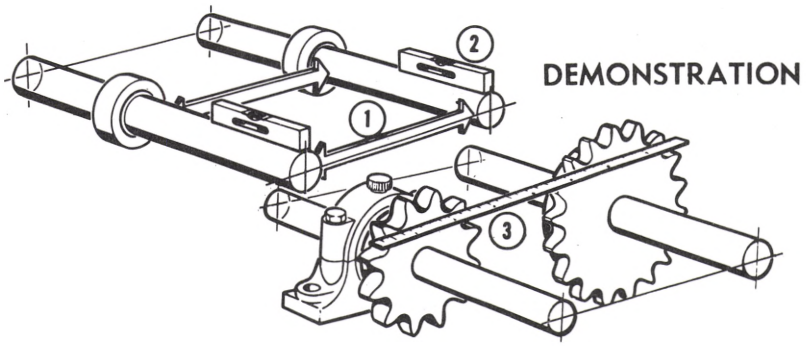

DEMONSTRATION

Fig. 24 Make sure sprockets are lined up — 1st, measure shafts to see if they are parallel — 2nd, see if shafts are level — 3rd, see if sprockets are set exactly opposite each other.

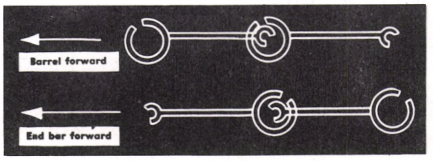

Fig. 25 Detachable chains can run with either barrel or link hook forward.

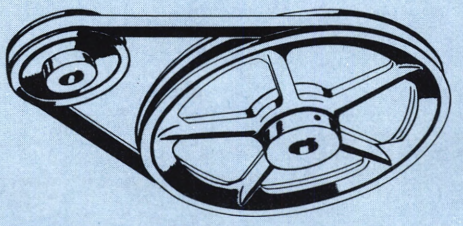

Fig. 19 V-belts run best when flush with the top of the groove.

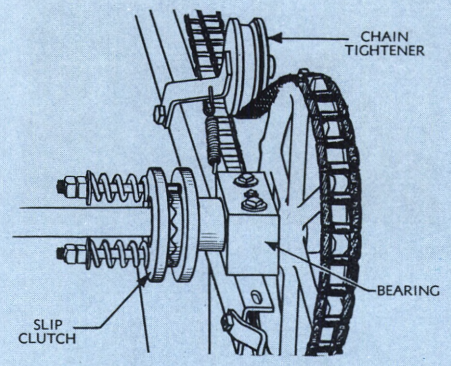

Fig. 20 Chain drive with slip clutch.

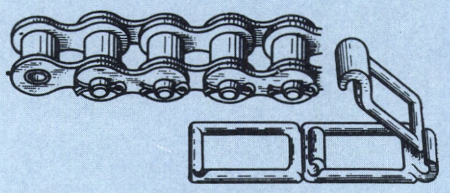

Fig. 21 Roller chain — detachable chain.

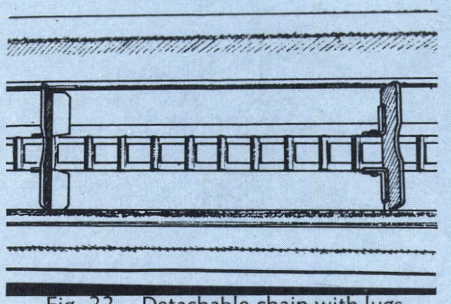

Fig. 22 Detachable chain with lugs (on corn picker).

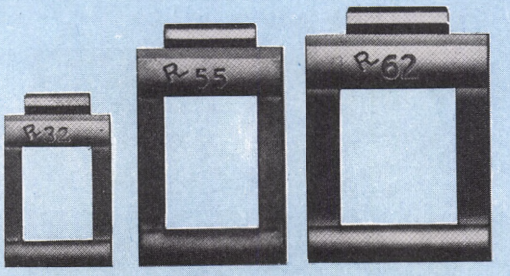

Fig. 23 Detachable chain links are made in many sizes.

TRANSMITTING POWER

Fig. 26 Chains need to be cleaned occasionally.

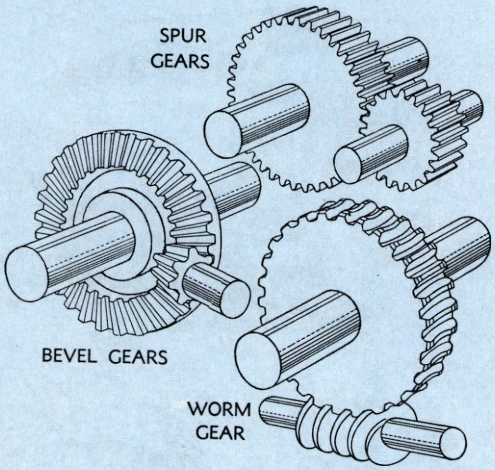

Fig. 27 Commonly used gears.

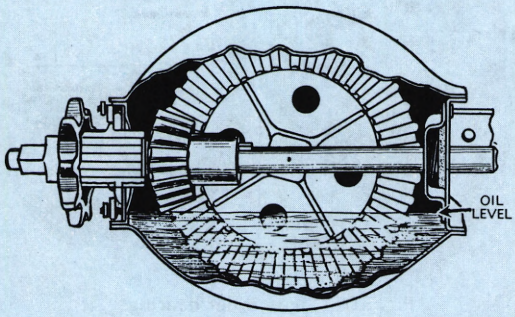

Fig. 28 Keep all gear cases filled to proper level.

LUBRICATION

All chains need to be lubricated. Usually SAE 30 or 40 grade motor oil is recommended for the chains. Clean the chains before oiling them. Take them off and wash them in a pan of kerosene before you start the machine. Then dip them in oil. Hang them up to let the excess oil drain off. If the chain is to be used under dusty conditions soak it in oil and wipe it off. Dirt will be held by the oil.

Chains will rust if not protected in storage. Therefore, take them off, then clean and protect them with oil. You may even leave them in oil during the storage season. Be sure to keep chains out of dirt. Don't throw them in a heap in the shed or drag them across the yard.

GEARS

Gears are used for changing shaft direction and for changing speeds. Three kinds of gears are commonly used, the spur or straight cut gear, the bevel gear, and the worm gear. The worm gear is used for making big reductions in the gear ratio. Gears require less space than chains or belts but are more expensive to make.

After bevel gears have been in use for a long time, they become worn and need to be adjusted by moving them closer together. This can be done by inserting washers, or by loosening a set screw. Be sure you move each one of a pair of bevel gears the same distance so they will continue to mesh properly.

On most of the newer equipment, gears are enclosed in a gear case and run in oil. If the case is tight, a straight gear lubricant of 80 or 90 grade or a heavy motor oil is usually recommended. If there is a problem of leakage, grease is often used. When grease is used it is best to use a highly stable grease, such as wheel bearing grease or lithium soap grease. In servicing gears, be sure to use a lubricant that will flow at the prevailing temperature. Gear lubricants should be changed at least once a year to get rid of the dirt and contaminants. However, where a highly stable grease is used in the gear box it may be left in longer than a year without changing.

CLUTCHES

Clutches on farm machines (we are not speaking here of the friction clutches used in the tractor) resemble gears in that they have teeth to mesh with each other in driving from one shaft to another or from a sprocket or gear running on a shaft. Some clutches will have square jaws to drive in either direction. Others will have saw-teeth jaws to drive in one direction only. (You should always stop your machine before engaging square or saw-toothed clutches.) Still others will have flattened teeth held together by light springs and are used only as safety clutches. If the machinery jams the clutch will slip, preventing breakage.

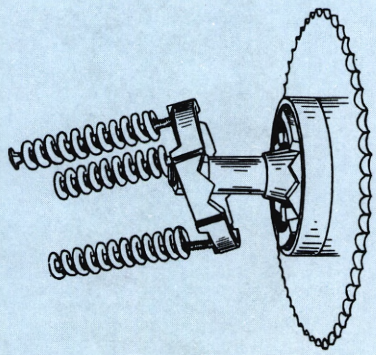

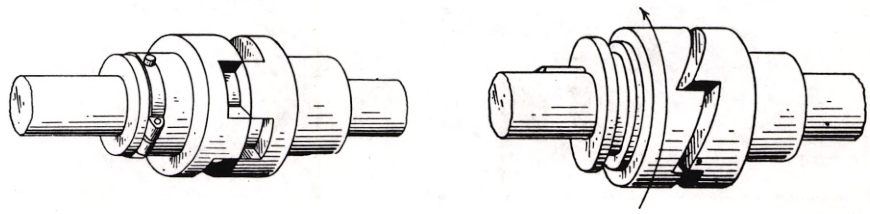

Fig. 29 Clutches used in farm machines: Slip clutch, square-jaw clutch, saw-toothed clutch.

TRANSMITTING POWER

Another type of clutch is used as a ratchet. It, too, drives in only one direction. You also find it on lawn mowers for driving the cutter blades alternately with one wheel and then the other, whichever wheel is traveling the longest path. And, of course, it is used for the same purpose on trailed mowers and other ground-driven machines.

Most clutches are used in dirty places where oiling them helps collect more dirt. Therefore, it is necessary to clean them with solvent occasionally and to keep the metal covered so it will not rust. Otherwise, clutches are simple power transmission units that work with little attention.

Whenever you get ready to start a machine, put a little kerosene on the slip clutch and turn the machine by hand to make sure the clutch will slip. You may need to jam the machine with a stick and use a wrench to make the clutch slip. It might even be necessary to loosen the adjustment. The main thing is to make sure this protective device will work.

Before throwing a machine in gear it is always a good practice to turn it by hand to make sure all the parts are free. You should be sure to do this when using drills and planters equipped with fertilizer attachments. These can get stuck overnight in damp weather.

BEARINGS ON MACHINES

All types of bearings are used on farm machines. There are plain bearings made from babbitt, bronze, wood, and other materials. Machines also use many roller bearings, ball bearings, and tapered roller bearings. Keep all bearings in proper adjustment and well lubricated. Most machinery bearings are equipped with a grease gun fitting for lubrication. Regular pressure gun grease is usually recommended for these bearings. If some of the bearings are located where they pick up heat, a special heat-resistant grease such as wheel bearing or lithium soap grease may be more satisfactory. Always wipe off the fitting before applying the grease gun.

On some machines a special sealed bearing is sometimes used. This bearing usually contains enough grease for a season or more of operation. You may need to remove it for repacking. Refer to your Operator's Manual to find out how to care for these bearings. If a sealed bearing has a grease fitting, be careful in greasing it. Too much grease may cause the bearing to heat and may also damage the seal.

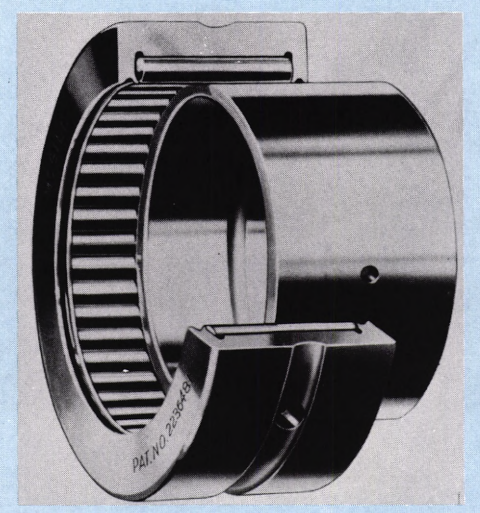

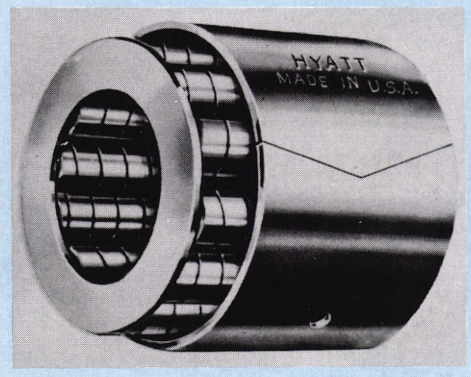

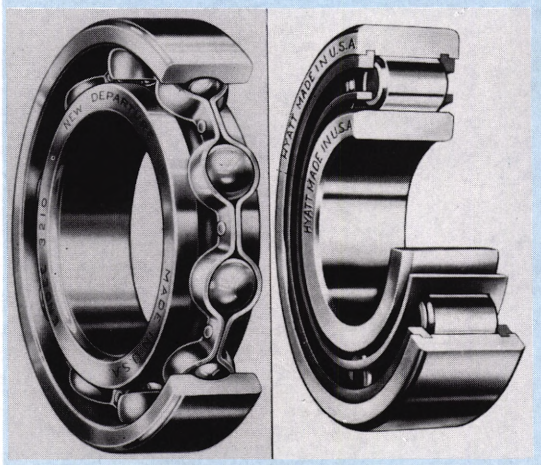

Fig. 30 Some roller bearings and a ball bearing.

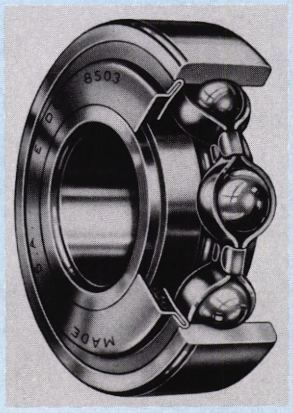

Fig. 31 A sealed ball bearing.

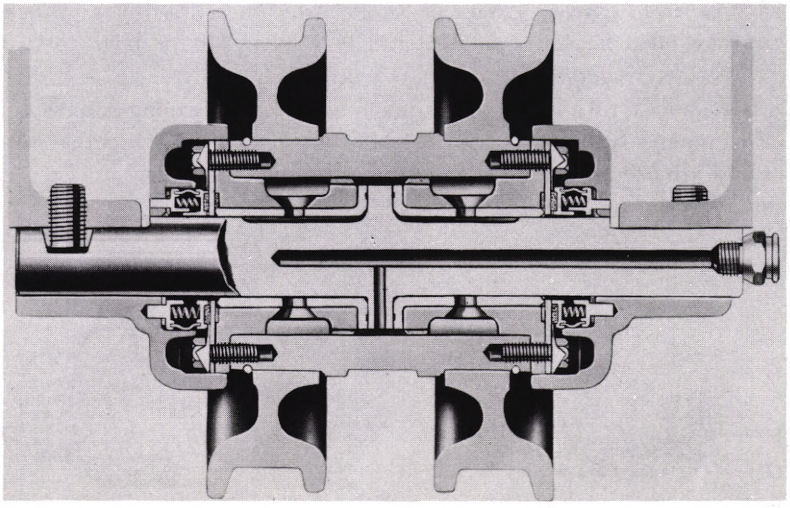

Fig. 32 Here is a plain bearing — this one is a track roller bearing.

WORK UNIT
Fourth Book Unit 2

TRANSMITTING POWER

Select any machine and tractor combination or self-propelled machine you like and see what you can learn about transmitting power. Be sure you use your Operator's Manual in learning how to operate and adjust your machine.

1. What power and machine combination did you select? _____

2. What is the rated crankshaft speed of the power unit? _____

3. How is the machine driven? PTO? _____ Flat belt? _____ V-belt? _____

   Chain? _____

4. What kind of clutch or safety release device is used between the power unit and the machine?

   Explain _____

   _____

   Did you check and adjust the slip clutch? How? _____

   _____

5. Check the speed of some of the parts of the machine. Example: The beater speed on a combine. List the parts you checked and their speed _____

   _____

   If these speeds were not the same as recommended in the Operator's Manual, would the machine work properly? Why? _____

   _____

6. Adjust all of the chains and belts on the machine. Tell how you adjust each of the following:

   Roller chain _____

   Steel link chain _____

   V-belt _____

   Flat belt _____

7. Check all of the safety shields on your power unit and machine. What did you find? Were any missing?

   Bent? _____

   _____

   _____

   Before going on, be sure all of the shields are on the machine and in their proper place.

(Over)

8. Does the machine have a gear case? _____ What kind of lubricant is used? _____

How often should it be serviced? _____

9. How do you lubricate roller chain? _____

_____

10. How do you lubricate steel link chain? _____

_____

11. How do you lubricate bevel gears? _____

_____

12. Try this problem. A pulley with a diameter of 6 inches runs at a speed of 900 revolutions per minute. It drives another pulley with a diameter of 9 inches. The two pulleys are connected by a flat belt. What is the speed of the second pulley?

13. Trace out at least one major operation in the machine. Start with the power source and continue until you reach an important part of the machine, such as the cylinder on a combine. Draw a sketch of the path of the power and indicate the speed of the different devices that are used to transmit power.

Note: Fill out this work unit, using your own Machinery at home. Be ready to discuss your experiences with other 4-H members at your next club meeting.

MEMBERS' CHECK-UP

FOURTH BOOK UNIT 2 — TRANSMITTING POWER

Place the letter for the correct answer at the right of the page.

1. Power: (A—is increased through gears) (B—is not changed through gears except for friction loss). _____

2. Speed changes may be made by means of: (A—gears only) (B—belt drives, chain drives and gears) (C—clutch). _____

3. Flat belts will carry more power between pulleys: (A—if they are tight against the pulley surface) (B—if they are loose and do not heat the bearings). _____

4. V-belts are easier on bearings because they: (A—have more surface contact with their pulleys) (B—are narrower and cool better) (C—use the wedge principle and grip the pulleys). _____

5. Chains waste less power than flat belts but: (A—they are more expensive and need safety clutches) (B—they break easily and are always jumping off sprockets). _____

6. Like belts, chains can have idlers also. An idler should be on the: (A—tight) (B—loose) side of the chain. _____

7. Gears: (A—are better than chain drives because of compactness and because less power is lost in distance between machine parts) (B—allow more compactness in design but make the machine more costly). _____

8. Slip clutches connect one part of a machine to another to transmit power. (A—These clutches should not slip because they will burn out) (B—Slip clutches are made so they will slip for safety to the machine). _____

9. A ratchet is a clutch that allows the shaft to turn independently on a wheel or pulley that normally drives it. Such a drive: (A—is automatic and should not be lubricated) (B—needs attention to keep it clean and working free). _____

10. When storing a machine the chains should be: (A—left on) (B—removed, cleaned, and protected by oil) (C—tightened and oiled). _____

Note: This Check-Up Sheet is intended to test what you have learned and to stimulate discussion with the other members. The more you discuss these questions with your leader and the other members the more you learn.

TOOLS FOR BREAKING THE SOIL

Fig. 1 A three-bottom moldboard plow.

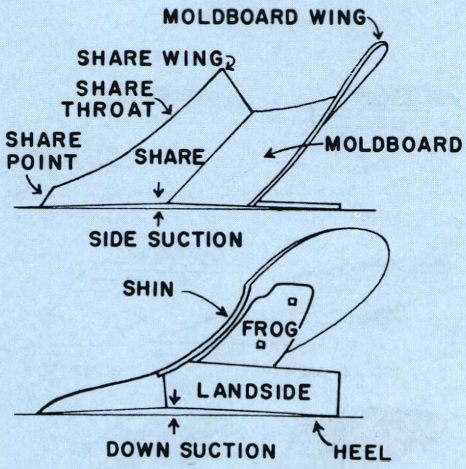

Fig. 2 Parts of a moldboard plow.

Fig. 3 A disk plow.

Fig. 4 A four-row planter-lister (mounted on a tool bar).

It is common practice to use deep-tillage tools to prepare the seedbed. The implement used and the amount of preparation needed vary for different soils and climates. In some areas it is desirable to do a good clean job of tillage to destroy insects, while in other areas where loss of topsoil is a problem, plant growth is left on top of the ground. You can determine the best method for your community by noting how experienced farmers prepare their seedbed. If you have a special problem on your farm, ask your county extension agent for advice.

THE MOLDBOARD PLOW

The moldboard plow is a common tool on many American farms. In general, this plow is used in areas where rainfall is sufficient to produce a good crop. In such areas there is usually a heavy plant growth which needs to be turned under. The heavy plant growth is turned under so it will decay and furnish humus to the soil and will not interfere with later cultivation. In these areas there is often an insect problem. Turning the heavy plant growth under helps to control insects. If lime is used, turning and mixing the soil is desirable to get the lime mixed into the soil.

DISK PLOWS

Disk plows and tillers are favored in areas where the climate is dry and where the soil is rough or stony. Such soil conditions do not permit the operation of moldboard plows to good advantage and in these areas it is often desirable to leave the plant growth on top of the soil to keep it from blowing.

Disk plows work well in dry and hard soil that moldboard plows won't penetrate. They also work well in heavy muck, gumbo, hardpan, rocky, and loose sandy soils. The wheat farmer finds the disk tiller a big time saver. It works well at high speed. It kills the weeds so that moisture is conserved and, as was mentioned above, the trash is left on top of the ground.

LISTERS

Listers are favored in dryland farming areas and where the soil is crumbly. A lister works much like a moldboard plow, except that it has a double moldboard and throws the soil in two directions. This leaves a furrow in which the crop is planted. Planting in the furrow places the seed in the moist soil. This is a wise practice in areas of limited rainfall.

Listers that have a disk type of furrow opener are also used in some areas. The advantage of the disk type of furrow opener is that it works well in trashy soils. In some areas listers are used in sandy bottom lands.

Some crops grow faster if planted on ridges. The top of the ridge is dryer and warmer than the furrow is at planting time, therefore seeds that are sensitive to soil temperature will germinate and grow more rapidly when planted on the ridge.

Cotton is a crop that is often planted on top of the ridge. A machine called the bedder is often used to construct ridges and till the soil.

TOOLS FOR BREAKING THE SOIL

SUBSURFACE TILLAGE TOOLS

By subsurface tillage tools we mean those tools that work at a shallow depth and do not turn the soil, such as a field cultivator.

For best results the sweeps are staggered to permit trash to flow through without plugging. The sweeps should be set to operate almost flat and their sharpness should be maintained. Heavy-duty spring teeth are sometimes used for subsurface tillage. These teeth are made with reversible points and can be reversed whenever they become dull on one end. Most subsurface tillage tools are rather simple to adjust and operate, but require a large amount of power.

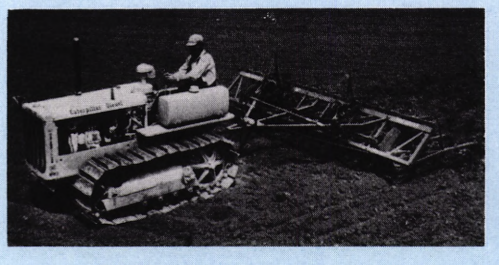

Fig. 5 Subsurface tillage with heavy-duty spring teeth.

PLOW BOTTOMS

Different soil conditions require plow bottoms of varying shapes to do a good job of plowing. The texture of the soil and the amount of moisture it contains determine whether it should be pulverized thoroughly or merely turned over to be pulverized later.

How much a plow bottom pulverizes the soil depends upon the shape of the bottom. A long, gradually curving moldboard turns the furrow gently and does not break up the soil unduly. Short, abruptly curved moldboards twist and shear the soil and pulverize it. Between these two extremes are many types of bottoms for general use. They are called stubble, general purpose, high-speed, moldboard, and blackland bottoms.

The breaker bottom is used in tough sod where you may want to turn the furrow slice completely so that the crop will not continue to grow. Stubble bottoms are especially adapted for plowing on old ground where good pulverization is desired. Most general purpose bottoms or high-speed plow bottoms are used with tractors. The speed of the tractor is usually 3 to 6 miles an hour. Such bottoms meet the general demands for most farmers and will do a good job in stubble, old ground, and a variety of other conditions. They are the best for all around, general farm use.

The slat moldboard is highly favored in tight, sticky soils where it is difficult to get the moldboard to scour. The slats give a higher pressure between the soil and moldboard and will scour much better. A special blackland bottom is often used for plowing gumbo or buckshot soils where scouring is a primary problem.

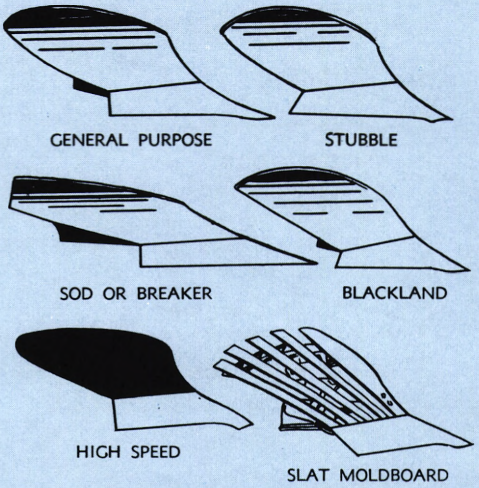

Fig. 6 A few commonly used plow bottoms.

ADJUSTING TOOLS

Before you start to make adjustments on a machine, try to place it in working position. If you are working on a plow, block up wheels that do not run in the furrow. Use blocks the same height as the furrow depth. Hitch the machine to the tractor and block up the tractor wheels that run on unplowed land. Move the adjusting levers and see what they do. Then take a look at different parts of the machine and see if you can find other adjustments. Look at your Operator's Manual for the machine.

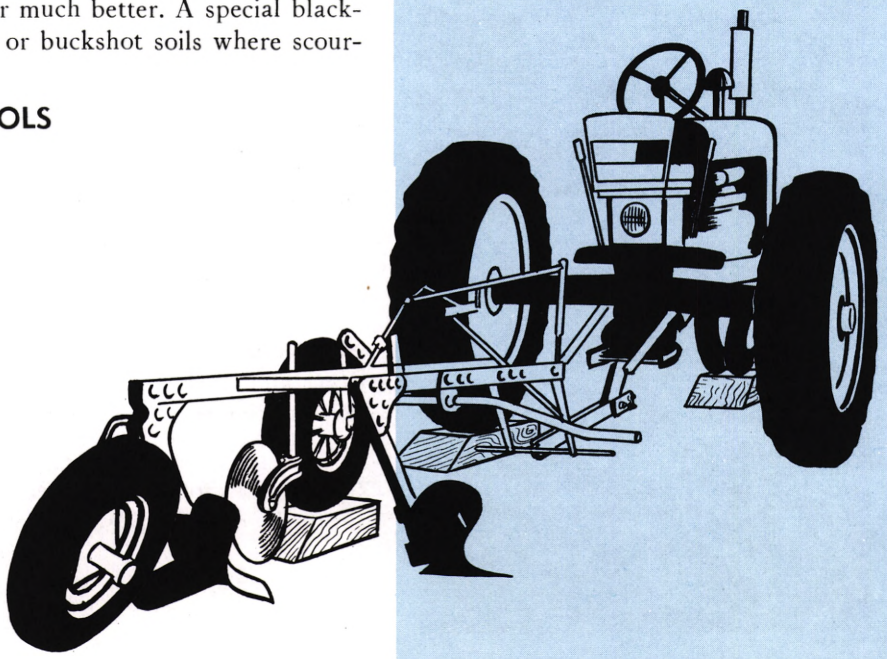

Fig. 7 Put the machine in working position — then adjust.

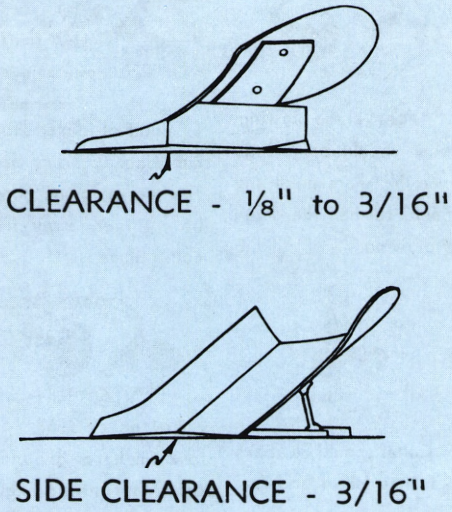

Fig. 8 Measuring clearance or "suction" of a plow.

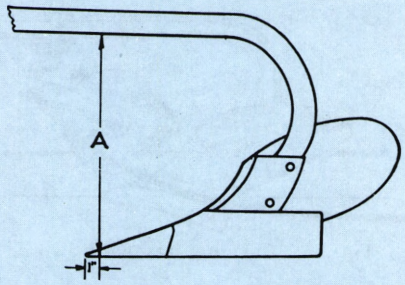

Fig. 9 To check for sprung beams, measure distance "A" on all bottoms. It should not vary more than 1/4 inch.

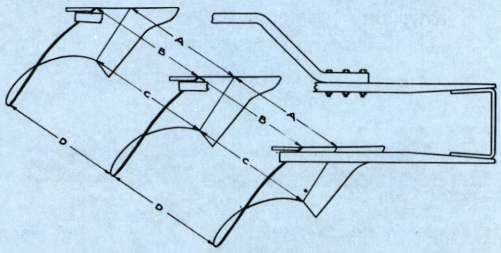

Fig. 10 Checking alignment of bottoms. Measurements A, B, C, D should be equal within 1/2 inch between corresponding points.

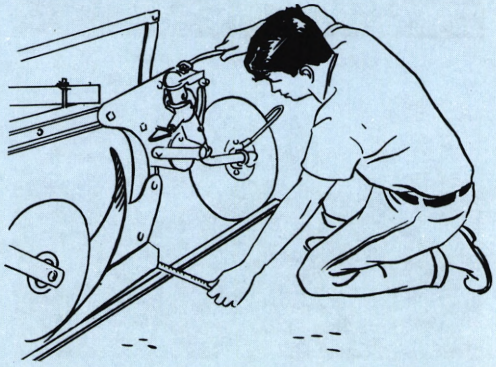

Fig. 11 Adjusting the rear furrow wheel.

PROPER SUCTION

The plowshare needs 1/8 to 3/16 inch clearance where the share joins the bottom. This means that if you put a straightedge under the point of the share and measure the distance which it is turned down, you will find that it turns down about 1/8 to 3/16 inch at the tip of the point (often called "suction"). Side clearance should be about 3/16 of an inch. You can measure all these distances with your ruler. If the share is worn, these measurements will be less. When the share becomes extremely worn, a flat surface forms just back of the cutting edge. This keeps the share from digging into the ground.

CHECK PLOW FOR SPRUNG BEAM

If you hit a rock or turn too sharply with a plow while it is in the ground, it may have a sprung beam. Before checking for a sprung beam or "frog," be sure that the shares are in good condition. The share should be tight and firmly in place. To make the check, measure from a point 1 inch back from the tip of the plowshare to the underside of the plow beam directly above each bottom. There should not be over 1/4 inch difference in these measurements.

Plows having more than two bottoms can be checked for alignment by measuring distance between corresponding points on the bottoms. Measure from the point where the side of the share attaches or meets the moldboard. This measurement should not be more than 1/2 inch in variation. If you find much variation in the width or the height, it means that the beam or the frog of the plow is bent and should be repaired. Uneven furrow slices or ridging of the furrowed ground are common indications of a sprung bottom or beam.

ADJUSTING THE FURROW WHEEL

The purpose of the rear furrow wheel is to keep the plow from pushing to one side. When this wheel is properly adjusted there should be about 1/4 to 1/2 of an inch clearance between the rear of the land side of the back plow bottom and the furrow wall. The rear furrow wheel may also be used to tip the plow forward so that it will go into the ground easier. (This adjustment is usually made by means of the hitch.) Your Operator's Manual will give you instructions on how to make proper adjustments of the rear furrow wheel. The other wheels are mainly used to carry the weight of the plow when it is being transported. There should be little weight on these wheels when plowing, provided the hitch is properly adjusted.

ADJUSTING ROLLING COLTERS

Rolling colters on plows are used to cut trash and to help keep the plow from clogging. In general the colter should be set about 2 inches shallower than the depth of plowing and it should never be set deeper than 4 inches. If the colter is set too deep it is likely to collect trash and cause plugging in front of the colter. Notched colters are sometimes used to help keep the colter turning when cutting heavy trash. To obtain a neat furrow wall, the colter is usually set 1/2 to 3/4 of an inch outside of the land side of the plow.

TOOLS FOR BREAKING THE SOIL

ADJUSTING JOINTERS

The jointers should be set to cut 2 to 3 inches deep. The points should be set as near the colter as possible. The purpose of the jointer is to cut a small furrow off the main furrow slice and throw it toward the furrow. Turning under the edge of the main furrow slice enables the plow bottom to do a better job of covering.

TRASH-COVERING ATTACHMENTS

In areas where it is desirable to cover all the trash to control insects or to prevent plugging of other implements which will be used later, several other attachments can be used which will help. Some plows can be equipped with a special trash-covering shield. Another way to turn heavy trash under is to use a couple of long wires which drag the trash down and pull it along under the dirt which is thrown over by the plow bottom. The wires hold the trash down while it is covered with dirt. Some plows may be equipped with weed hooks which aid in turning under heavy trash.

ADJUSTING A DISK PLOW

The disk on a plow should be well polished and sharp. On most plows the disk can be set at different angles; on some, the disk can be moved up and down so as to make cuts of varying depths. The wheels on a disk plow play an important part in keeping the plow running level. If the plow fails to go into the ground properly, additional weight can be added. When extra weight is used on a tractor-mounted plow, some weight may need to be added to the front of the tractor also. If much weight is added to the plow, you must consider the effect it will have on the hydraulic lifting of the plow. The rear furrow wheel on a disk plow should run with the front of the wheel angled slightly toward the ground. This helps take some of the side draft (tendency to pull to one side) off the plow and makes it run more evenly.

Most disk plows have roller or ball bearings and are lubricated by a pressure gun with grease. When lubricating the bearing, do not force too much grease into it for you're likely to break the grease seal if you do. The disk plow, like all other shiny tools, should be covered with a good coat of rust-preventing material wherever it is stored.

The one-way plow and the disk tiller also have several adjustments for controlling the width of cut. The bearings of these implements are usually lubricated by a pressure gun. They should be greased regularly at recommended intervals. Disks should be kept sharp to do a tiptop job of killing weeds.

ADJUSTING LISTERS

Listers work much like plows and depend upon the sharpness of the share to do a good job of soil penetration. If the trash tends to clog in front of the lister bottom, a rolling colter can be used to cut the trash. The colter should be set in the middle of the lister bottom so that the same amount of dirt is thrown both ways.

On listers equipped with the disk type of moldboard, the angle of the disk can be changed for different types of soils. Changing the angle of the disk on a lister or a disk plow will aid in soil penetration.

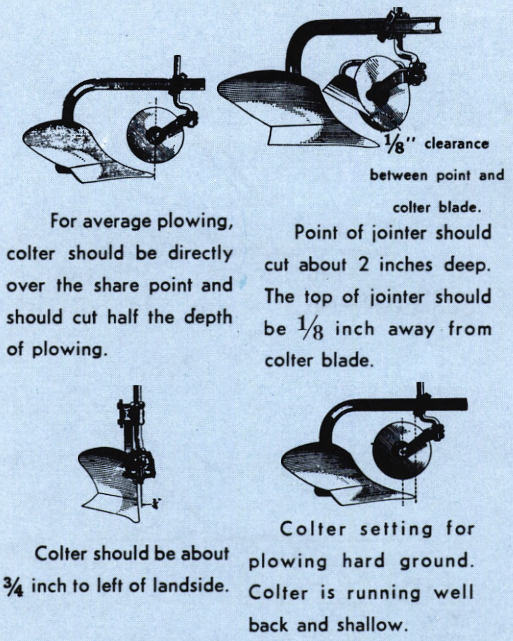

Fig. 12 Adjusting colter and jointer.

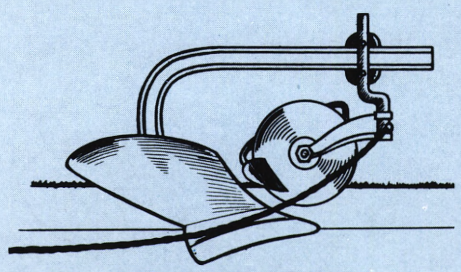

Fig. 13 Covering trash with a wire.

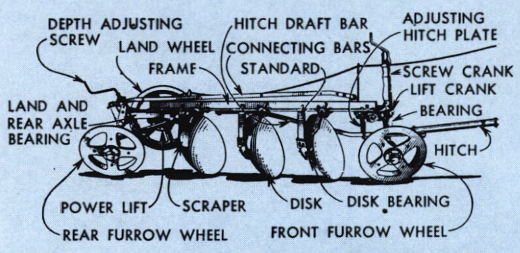

Fig. 14 Parts and adjustments of a disk plow.

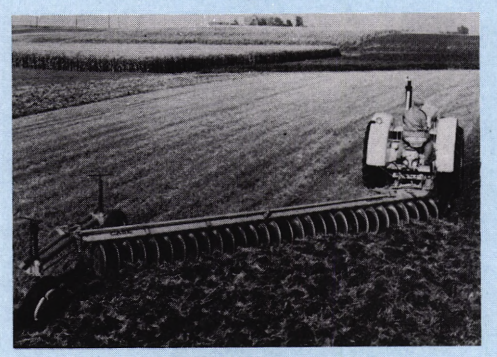

Fig. 15 A one-way plow.

Fig. 16 A planter-lister.

Fig. 17 The plow is a much used implement.

Since farm tractors are used for pulling loads, let's learn how to hitch a plow to a tractor. The plow is one of a farmer's most used implements. It is often improperly hitched, causing a waste of power, and sometimes making the tractor hard to steer. Poor hitches are hazardous, and result in work of poor quality.

You can hitch a tractor of almost any make to any pull-behind plow if you will learn:

1. The location of the center of tractor pull.
2. The location of the center of plow load.
3. The location of the line of draft between tractor and plow.

CENTER OF TRACTOR PULL

On farm tractors the center of pull can be figured as a point midway between the rear wheels in line with the axle. Actually, the point is ahead of the axle, but for all practical purposes this is not too important when adjusting hitches. Where the tractor has a swinging drawbar, take the hinge pin at the front end as the location of the center of tractor pull.

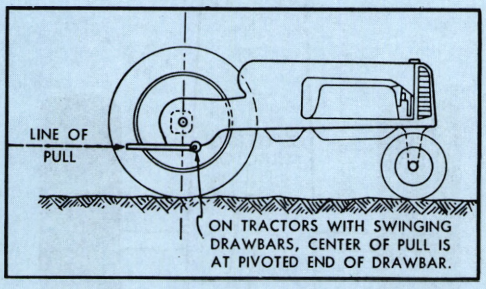

Fig. 18 Center of pull of a tractor.

CENTER OF PLOW LOAD

You might think of the center of load as a point on a plow bottom where, if you attached a chain and pulled the plow with the chain, the plow bottom would run level and cut its proper width and depth. Center of load on a single plow bottom is a point about 3 inches to the right of the shin and about where the share and moldboard meet. For a two-bottom plow, the center of load would be halfway between the center of load points of two single bottoms. For a three-bottom plow the center of load would be located at the point of center of resistance of the middle bottom. What you are trying to do is set the drawbar on your plow and tractor so that you will have a straight line from the center of load of your plow to the center of tractor pull. (We'll talk about how to locate the line of draft later.)

On a disk plow or disk tiller, commonly called a "one-way," the center of plow load can be considered as the center of the disk gangs.

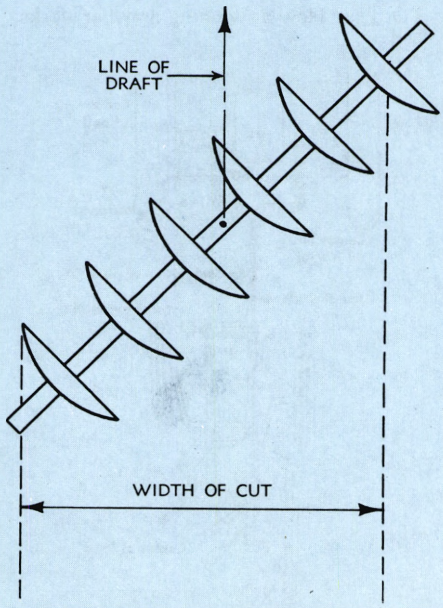

Fig. 19 Center of pull and line of draft for a disk plow.

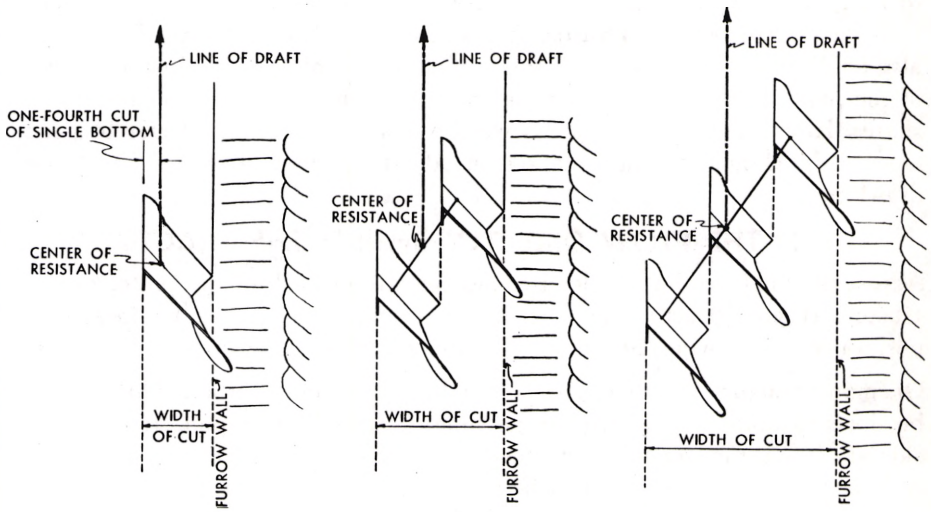

Fig. 20 Centers of resistance and lines of draft — one-bottom, two-bottom and three-bottom plows.

TOOLS FOR BREAKING THE SOIL

TYPES OF PLOW HITCHES

Here are four types of plow hitches:

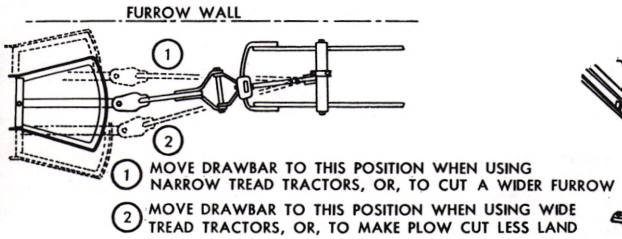

Fig. 21 Dial hitch — the drawbar swings like the hands on a clock.

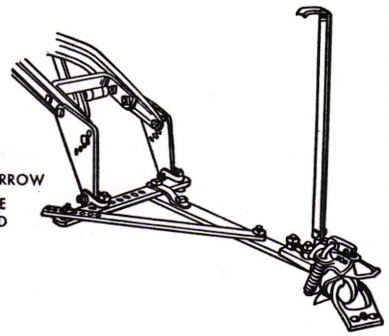

Fig. 22 Figure "4" hitch — the angle brace bar makes it look like a "4."

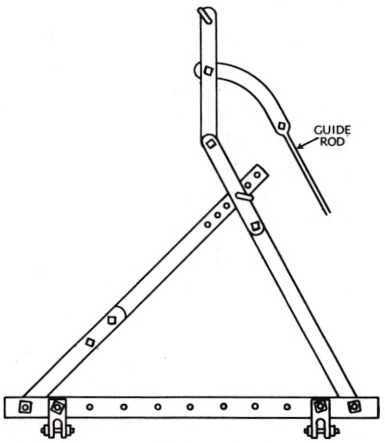

Fig. 23 Type "A" hitch — used on disk plows and sometimes on moldboard plows.

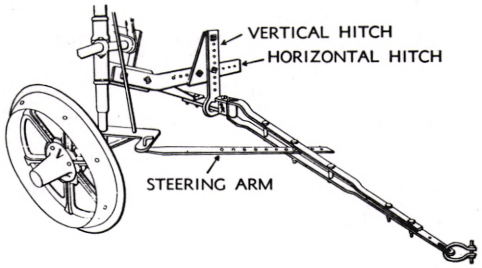

Fig. 24 Typical hitch arrangement on a standard disk plow.

SET THE TRACTOR DRAWBAR EXACTLY RIGHT

Now let's talk about the tractor drawbar. It should be set about 15 inches from the ground. Some tractors have an adjustment for raising and lowering the drawbar. If the hitch on the tractor is too high, the front wheels will tend to rise. That's what makes steering difficult. A hitch that is too high may turn the tractor over backwards on a steep slope. A high tractor hitch may also tend to pull the plow out of the ground. If the hitch is too low, the front of the plow will be pulled down and the plow will run on the points of the shares. Hitching too low gives less weight on the rear wheels. Refer to your Operator's Manual for information on adjusting the vertical height of the drawbar.

HITCH THE PLOW DIRECTLY BEHIND THE TRACTOR

Adjust the hitch so that the load comes directly in back of the center of the tractor. If your tractor has a swinging drawbar, it should be locked in position when plowing. So doing will hold the plow in position on hillsides.

On many tractors the rear wheels can be set closer together. This should be done to obtain, as nearly as possible, a straight line pull. It cuts out side draft on the tractor and steering becomes easier. Side draft is the tendency for the pulled implement to pull to one side instead of following straight behind the tractor. Keep in mind that there is more danger of tipping the tractor over on sides of hills, terrace back slopes, and ditches, when the wheels are set inward.

DEMONSTRATION!

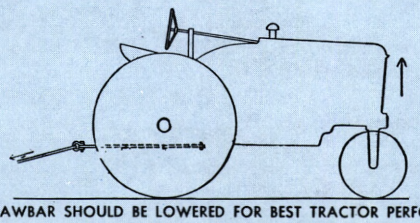

DRAWBAR SHOULD BE LOWERED FOR BEST TRACTOR PERFORMANCE.

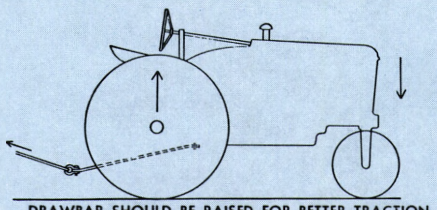

DRAWBAR SHOULD BE RAISED FOR BETTER TRACTION AND LESS SLIPPAGE OF THE REAR TRACTOR TIRES.

Fig. 25 Set your tractor drawbar to the right height.

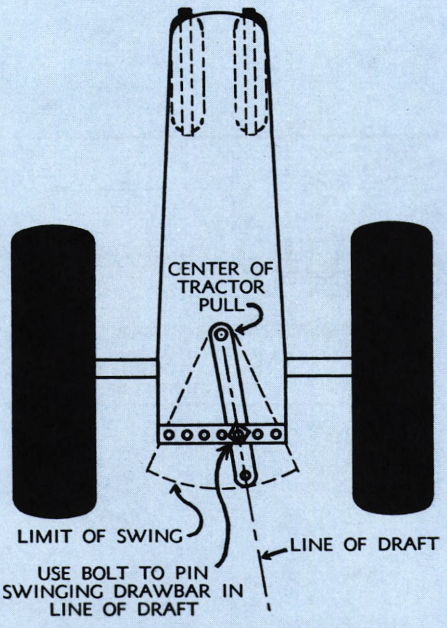

Fig. 26 How a swinging drawbar works.

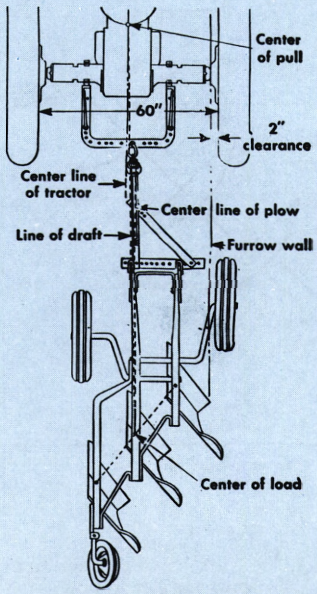

Fig. 27 Line of draft — three-bottom plow.

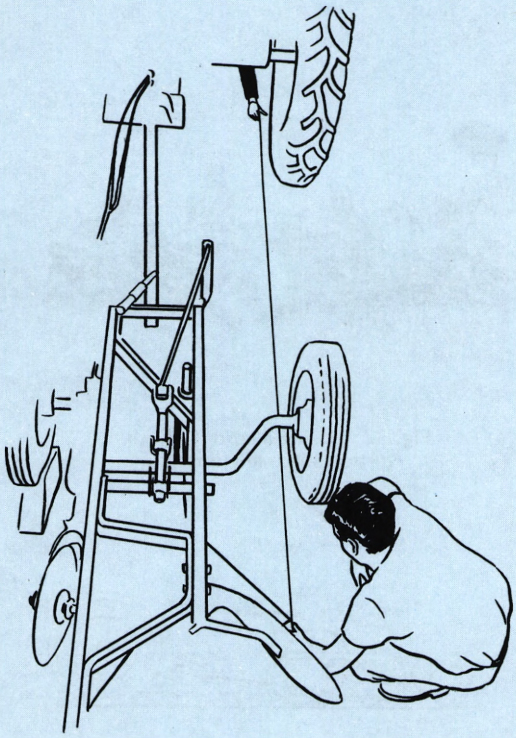

Fig. 29 Line up the plow behind the tractor, using a string.

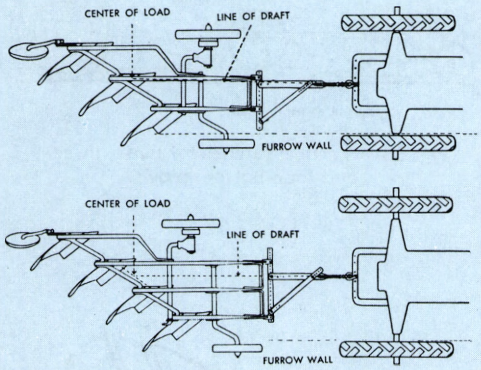

Fig. 30 Horizontal hitches for three- and four-bottom plows.

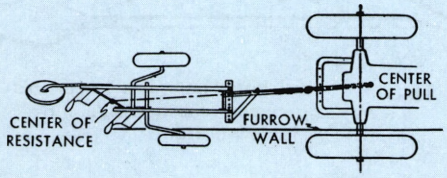

Fig. 31 Where center of pull is not directly ahead of center of resistance, adjust plow tongue and drawbar in a straight line.

HITCHING TO A DISK PLOW

When hitching to a disk plow the center of the tractor should be lined up with the center of the plow. On a disk plow, the wheels take the side draft and help to make the plow run straight. There are adjustments for changing the angle of the plow wheels; these may need to be changed. A disk plow, after the opening round, should be set to run level. In extremely hard ground it may be necessary to add weights to the plow or to the wheels.

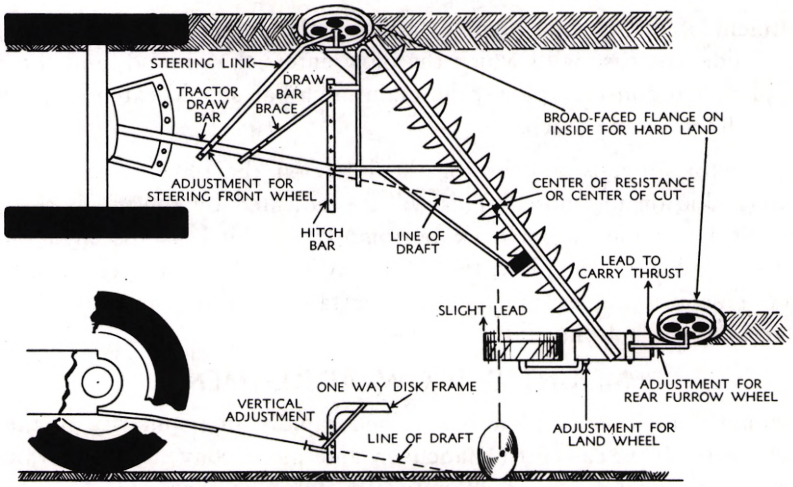

Fig. 28 Details of a disk plow hitch.

PLOW HITCHING – MOLDBOARD PLOW

Before making any actual measurements, drive your tractor straight forward for several feet and then pull the plow straight up behind the tractor. This will line up the plow with the tractor. Adjust and level your plow before hitching it to the tractor.

Use a string run straight back from a point about 2 inches inside the right rear wheel of the tractor and about 1 to 1½ inches in from the outside tip of the front plowshare. The string will locate where to hitch the tractor. Holding the string about 2 inches away from the furrow wheel will allow enough clearance so the sidewall of the rear tractor tire will not rub on the furrow wall. Your tractor and plow are now in the same relative positions as they are when you are plowing.

LOCATE LINE OF DRAFT

Now stretch a cord from the center of tractor pull to the center of plow load. This locates the line of draft. The drawbar hitch point should be just over this line.

HORIZONTAL HITCH ADJUSTMENTS

Adjust the tractor drawbar and the plow tongue in a horizontal plane; they will need to be parallel to the line of draft (the string mentioned above). On tractors that do not have swinging drawbars, hitch the clevis of the plow in the hole on the tractor drawbar directly under the string used for aligning, or in the hole nearest to the left of this string. Where the tractor has a swinging drawbar you will swing the drawbar over parallel to the string. Lock it in this position. Then proceed to adjust the hitch on the plow so that it also is parallel to the string. Set the angle-brace bar to hold the hitch in the adjusted position. If the rear wheels of the tractor are rather far apart, the plow tongue will have a wide angle when properly adjusted. But on many tractors this can be reduced by setting the rear wheels closer when plowing.

TOOLS FOR BREAKING THE SOIL

MAKE VERTICAL HITCH ADJUSTMENTS

To locate the proper height for setting the plow hitch, stretch a cord from the center of plow load to the end of the tractor drawbar. The hinge bolt should be in line with the string. If it is not in proper alignment, move it up or down as required. Many complaints about lack of penetration by shares can be corrected by this adjustment.

Adjustment of the vertical hitch determines the amount of clearance under the land side, the ease with which the plow enters the ground, and the draft of the plow. On pull-type plows, the main hitch bar should extend downward from the hitch of the tractor.

If the tractor hitch is too low or the hitch on the plow is too high, the plow may skid on its "nose." This will be indicated by too much clearance under the land side of the back bottom. If the hitch is too high on the tractor or too low on the plow, the plow may have difficulty getting into the ground. This also may be indicated by the tail wheel or rear land-side bearing hard on the bottom of the furrow.

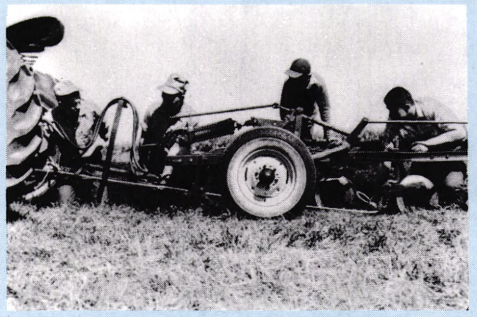

Fig. 32 Using a cord to check vertical hitch alignment.

MOUNTED PLOW ADJUSTMENT

The mounted moldboard plow has gained rapidly in popularity in the last several years. It is easier to maneuver and more convenient to transport than a trailing plow, and is well suited to hydraulic controls.

There are many different types of mounted plows, but their adjustments are all quite similar. The most common type is mounted to the tractor with a three-point hitch. Most of the adjustments for these plows are obtained with the controls on the three-point hitch.

The upper link is used with the control, which raises and lowers the hitch to give the proper plowing depth and downsuck. Shortening the top link, for example, gives the plow more downsuck and makes it try to run deeper. The plow can be leveled by a control on the lower links. Sometimes a crank is used. On others a turnbuckle arrangement is used.

The proper width of cut can be obtained in different ways on different makes of plows. On some, the only way to change the width of cut is to change the rear wheel spacing of the tractor. On most mounted plows there is an adjustment on the plow for this purpose.

It is important to use the proper procedure for adjusting mounted plows. Always follow the outline given in your Operator's Manual when adjusting mounted plows.

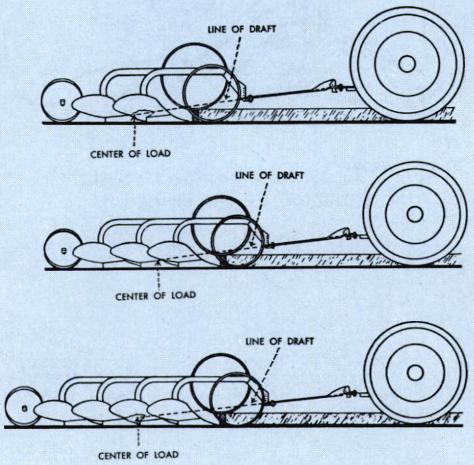

Fig. 33 Vertical hitches for two-, three-, and four-bottom plows.

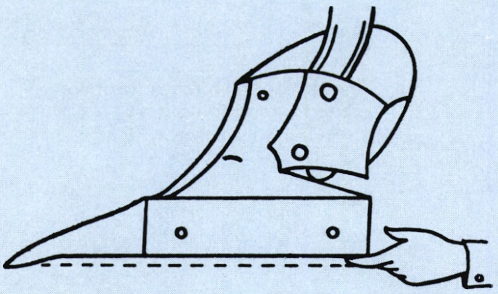

Fig. 34 There should be only a fingertip's clearance between rear land side and furrow bottom.

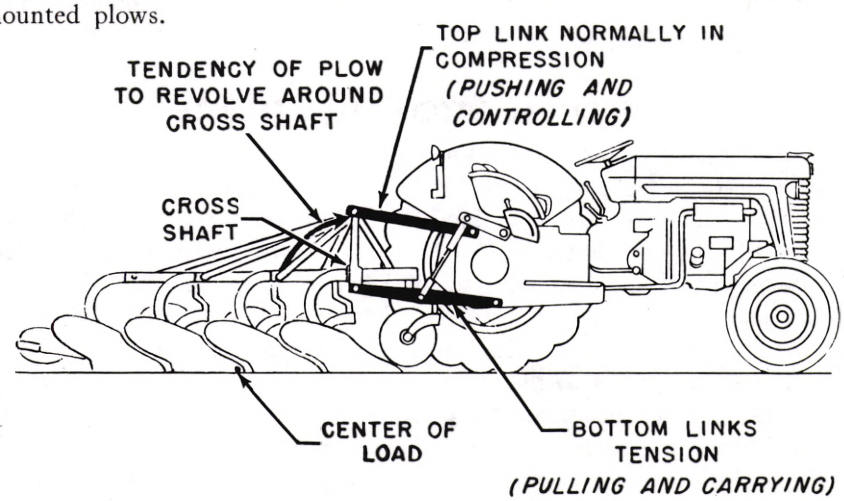

Fig. 35 A mounted plow adjustment is provided by controls for three-point hitch.

WORK UNIT
Fourth Book Unit 3

TOOLS FOR BREAKING THE SOIL

A moldboard plow, lister, middlebuster, disk plow, or any other tool for breaking the soil may be used for this unit.

1. Tool selected _____. Size _____. Is the tool mounted or trailed? _____

2. What should the rear wheel spacing of the tractor be for use with this tool (center to center of tires)?

   _____ inches.

3. Make a list of the lubrication requirements of this tool.

Place	Type of lubricant	How often serviced

4. How do you keep the surfaces that contact the soil from rusting? _____

   _____

   _____

5. How deep do you normally run this tool? _____ inches. How is the tool adjusted to obtain a given depth? _____

   _____

   _____

6. How is the width of cut controlled? _____

   _____

   _____

7. Does the tool have a tail wheel? _____ How should it be adjusted? _____

   _____

   _____

   _____

(Over)

8. What attachments does this tool have for trash coverage? _____

_____

If trash is normally left on the surface tell why. _____

_____

9. List some possible causes of excessive draft for the tool you selected? _____

_____

_____

_____

10. With the aid of your Operator's Manual, locate all of the adjustments on your tool and list what each adjustment is intended to accomplish. If you do not have an Operator's Manual see if your implement dealer can get one for you.

Adjustment	Purpose of adjustment

Note: Fill out this work unit, using your own machinery at home. Be ready to discuss your experiences with other 4-H members at your next club meeting.

MEMBERS' CHECK-UP

FOURTH BOOK UNIT 3 — TOOLS FOR BREAKING THE SOIL

Place the letter for the correct answer at the right of the page.

1. The center of pull on any tractor is (A—midway) (B—slightly to the right of center) (C—midway between the rear wheels and just ahead of the rear axle). _____

2. The ideal way to attach an implement is to have its center of pull fall (A—directly behind) (B—slightly to right of) (C—slightly to the left of) the center of the tractor. _____

3. Side draft means (A—adding weight to one side or the other of the tractor to keep it from slipping) (B—that there is some side pressure on the tractor wheels or that the implement hitched pushes to one side). _____

4. Important facts to know when hitching a plow to a tractor are: (A—location of the center of friction) (B—length of the figure 4) (C—location of center of tractor pull) (D—location of the center of load) (E—location of line of draft). Mark three answers. _____

5. Disk plows work best in (A—hard, dry soil) (B—soft, wet soil) (C—loose, sandy soil). _____

6. The moldboard plow (A—works better in dry, hard soil) (B—does a better job of covering trash) (C—will go deeper without plugging) than a disk plow. _____

7. A lister (A—is used for planting seeds in moist soil) (B—throws the dirt in a big pile on one side) (C—works all the ground thoroughly). _____

8. A plowshare should be kept sharp to (A—make the plow scour) (B—make the plow go into the ground better) (C—make the plow do a better job of covering trash). _____

9. Wheels on disk plows are used to (A—add weight to the plow) (B—make the plow run straight) (C—make it possible to back the plow). _____

10. If a plow does not throw even furrows look for (A—a dull share) (B—a sprung beam or frog) (C—the spring lift set too tight). _____

Note: This Check-Up Sheet is intended to test what you have learned and to stimulate discussion with the other members. The more you discuss these questions with your leader and the other members the more you learn.

APPLICATORS FOR CHEMICALS

Fig. 1 Spraying for weed control.

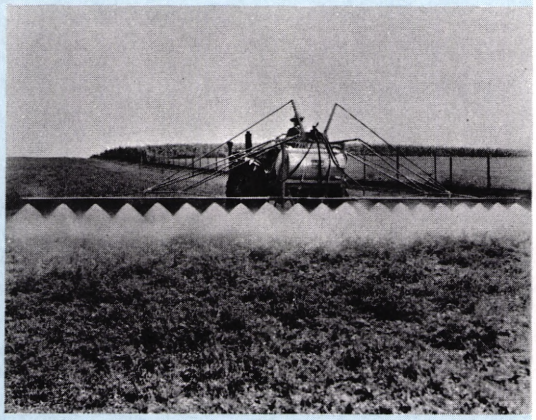

Fig. 2 Spraying for insect control.

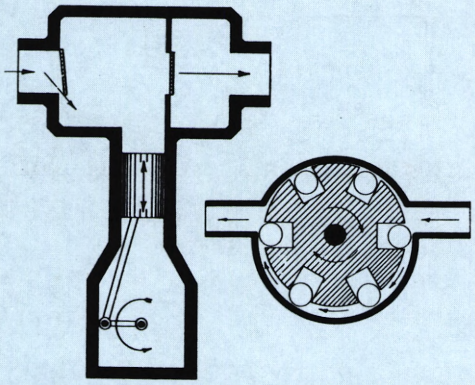

Fig. 3 A piston pump (left) and a nylon roller pump (right).

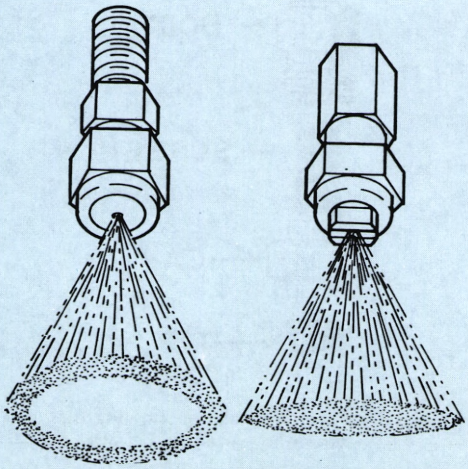

Fig. 4 A hollow-cone nozzle (left) and flat fan nozzle (right).

Some form of chemical application for control of crop or livestock pests can be found on nearly every farm. Most of these applications need to be made with precision to make sure that control of the pest will be obtained without wasting the chemical or causing damage. Sometimes the pesticide comes in a form to be applied as a liquid, and sometimes it is to be applied as a dry, granular material.

THE SPRAYER

A sprayer applies a chemical that has been mixed with water or oil. The main parts of a sprayer include:

1. A pump to supply pressure.
2. Nozzles to distribute and apply the spray material.
3. A pressure regulator to control spraying pressure.
4. Screens to remove sediment and keep nozzles from plugging.
5. A supply tank.

PUMPS

Several different kinds of pumps are used on sprayers. The most common types for low-pressure spraying include a gear pump and one that uses nylon rollers. A piston pump that works like the piston in your tractor engine is used for high-pressure spraying. In order to make pumps last a long time, make sure the water you use for the spray mixture contains no gritty material. As a rule of thumb, use only water that is clean enough to drink.

When you remove a pump for storage, flush it out with water and fill it with light oil, to prevent rust and corrosion.

NOZZLES

There are nozzles for all of the different spraying jobs you might have on your farm. The most common type of nozzle is designed for spraying a liquid and is normally used for applying a pesticide to field crops. This nozzle usually works under low pressures (from 15 to 100 psi) and is designed for working close to the object being sprayed.

A second kind of nozzle uses air under pressure as well as the liquid and produces a mist that can be sprayed a considerable distance. It is well suited for orchard work where it may be necessary to spray to the top of a tree.

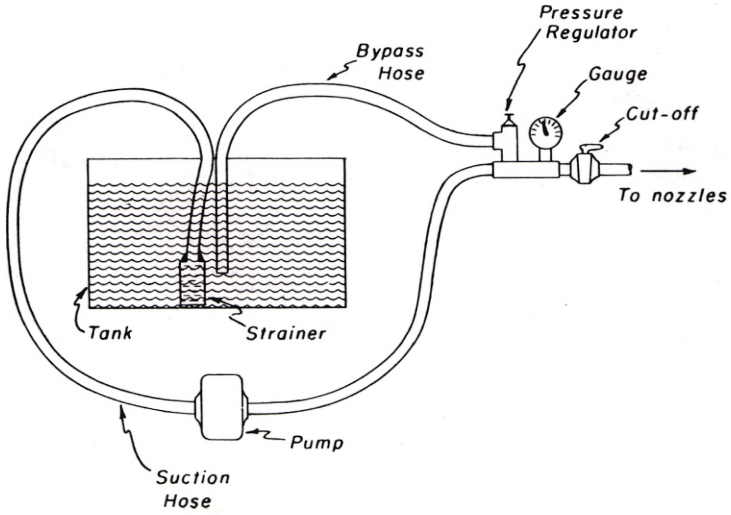

Fig. 5 Diagram showing parts of a sprayer.

APPLICATORS FOR CHEMICALS

There are three common types of nozzles used for ordinary spray work. The flat fan nozzle is the most popular for weed control work where it is necessary to place droplets on the leaf surface of the weeds. These nozzles have a flat, fan-shaped pattern and because of their tapered edge they must be overlapped slightly to give even distribution.

The hollow-cone nozzle has a flat disc and whirl plate. This gives a circular spray pattern that is hollow in the middle. These nozzles are often used for insect control work where the cone-shaped pattern helps to assure coverage in hard-to-reach areas of the plants.

A solid-cone nozzle has a solid circular pattern and is well suited for such jobs as spotting weeds in lawns with a hand sprayer.

SPRAY BOOMS

Spray booms enable the nozzles to be located as needed for a specific purpose. If, for example, you want to broadcast-spray a weed killer in a barnlot, place all of the nozzles in the boom and direct the spray downward so that it overlaps and gives uniform coverage of the weeds.

If you want to spray a row crop for insect control and need to apply a liquid spray material directly to the plants you can use three nozzles per row. One nozzle can be used directly over the row and one can be used on the end of a drop, on each side of the row. Sometimes the outlet over the row is plugged and the plant is covered with the two nozzles from the sides.

A typical use for a sprayer is to spray weeds between the rows of a growing crop. In this case the nozzle outlet over the row is plugged and two nozzles are used on a drop to spray the middle of the row.

PRESSURE REGULATOR

Precise application of a spray material is based on accurate control of the spraying pressure. This is accomplished with a spring-loaded valve. Changing the spring pressure regulates the amount of material that is allowed to flow through to the nozzles.

STRAINERS

You will find several different strainers on your sprayer. The purpose of strainers is to prevent solid particles from entering into the pump, hoses, boom, and nozzles. It doesn't take much dirt to quickly wear out a pump or plug a nozzle. You should use a strainer at the end of the suction hose. This can be a rather coarse strainer, say 40 mesh. A 40-mesh strainer has 40 holes per linear inch, or 1,600 openings per square inch.

There should also be strainers in the line between the pump and the nozzles and each nozzle should contain a strainer.

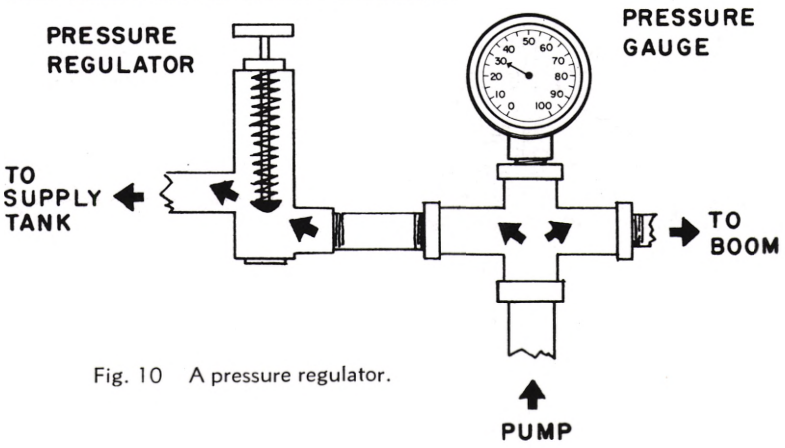

Fig. 10 A pressure regulator.

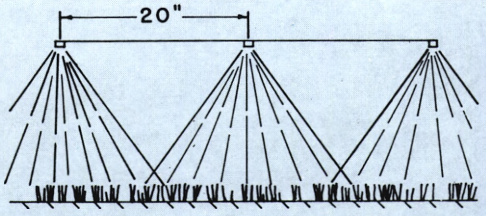

Fig. 6 Boom and nozzles set for broadcast-spraying with complete coverage.

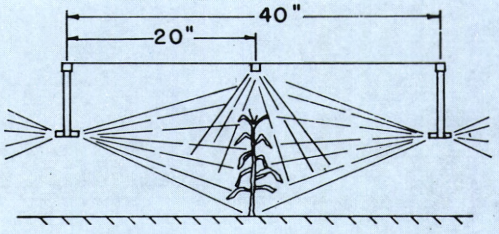

Fig. 7 Spraying a crop for insect control.

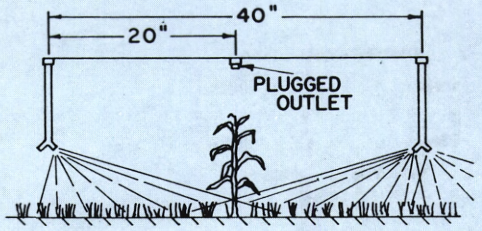

Fig. 8 Spraying a crop for weed control between the rows.

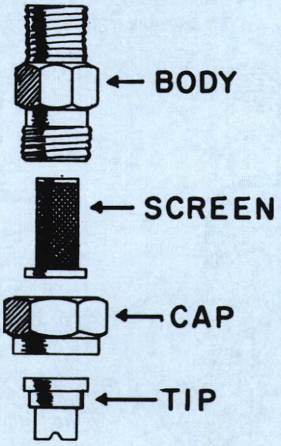

Fig. 9 Parts of a nozzle, showing the screen, or strainer.

APPLICATORS FOR CHEMICALS

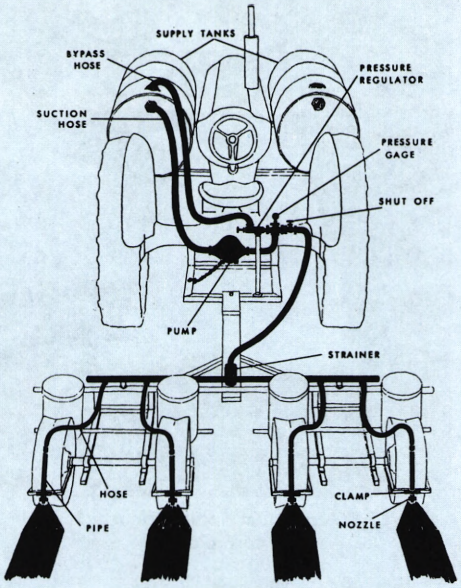

Fig. 11 A band-spray attachment for a corn planter.

Fig. 12 Checking nozzle discharge rate.

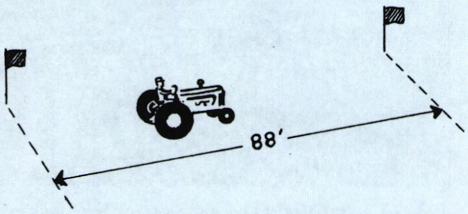

Fig. 13 Drive between markers 88 feet apart to check ground speed.

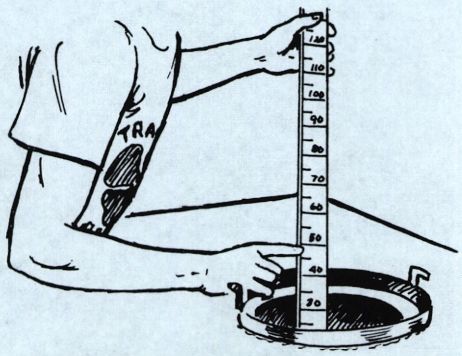

Fig. 14 Make a calibration run with water, and check application rate.

BAND SPRAYERS

There are many times when a chemical for weed control is band-sprayed on the surface of the row where a crop is planted. The chemical controls the weeds in the row, while weeds between the rows can be removed with cultivation. Application is usually made with an attachment on the planter but sometimes it is made as a separate trip with a sprayer.

SPRAYER CALIBRATION

In application of chemicals it is very important to see that the material goes on at the exact rate recommended on the label. The amount of material applied by a sprayer depends on:

1. The ground speed of the applicator.
2. The area covered by each nozzle.
3. The rate of flow through each nozzle.

The rate of flow of a spray material through a nozzle depends on the size of the opening and the pressure. The rate of flow does not vary directly with pressure. If you quadrupled the pressure, the rate of flow would be doubled.

The following formula can be used to help select a nozzle and calibrate your sprayer:

$$GPM = \frac{GPA \times W \times MPH}{5940}$$

GPM = gallons per minute of flow through the nozzle
GPA = application rate in gallons per acre
W = width of the area sprayed by each nozzle
MPH = ground speed, miles per hour

Suppose we wanted to make a broadcast application at the rate of 10 gallons per acre at a speed of 5 miles per hour. The nozzles on the sprayer are spaced 20 inches apart (each nozzle sprays a 20-inch swath). How large a nozzle would be needed?

$$GPM = \frac{10 \times 20 \times 5}{5940} = \frac{1000}{5940} = .168 \text{ gallons per min.}$$

one gallon = 128 ounces, thus .168 gallons per minute = 21.5 oz. per min.

We would want to select a nozzle that would have a flow rate of .168 gallons per minute at the spraying pressure needed for the situation. This information is needed to select a nozzle from the manufacturer's nozzle chart. Once the nozzles are selected, you can adjust the pressure regulator until you get 21.5 ounces per minute from each nozzle. Use a measuring cup or jar to make this check. As a final check before you mix in the chemical and start spraying, you can make a field check with a tankful of water.

CHECKING GROUND SPEED

If your tractor does not have a speed indicator you can check the speed if you use a watch with a sweep second-hand. Measure the time in seconds that it takes to drive between markers 88 feet apart. Dividing 60 by the time in seconds gives the speed of your tractor in miles per hour. If it takes 15 seconds to drive the distance, the speed would be 60 divided by 15, or 4 miles per hour. Be sure to check the speed with a running start.

APPLICATORS FOR CHEMICALS

GRANULAR APPLICATORS

Granular chemicals for weed or insect control must be applied with precision. This is particularly true of pre-emergence herbicides or soil insecticides. To meet these rigid requirements, you must calibrate the application equipment carefully.

In most cases the granular chemicals are usually applied as a band or row application at the same time the crop is planted.

FACTORS AFFECTING APPLICATION RATE

Most granular applicators use gravity flow with a rotating agitator for metering the granules through a variable orifice. It is difficult to design a granular applicator that is relatively inexpensive and yet capable of accurately applying many different chemicals over a wide range of field conditions. Several factors can cause a variation in the application rate, including the following:

1. Area of the metering orifices.
2. Speed of the agitator.
3. Ground speed of the applicator.
4. Nature and size of the granules.
5. Roughness of the field.
6. Humidity.
7. Temperature.

VARIATION IN GRANULES

All granules seem to look alike at first glance, but there is wide variation in the size and density of the particles and the nature of the inert carrier for the chemicals. For these reasons, a different applicator setting may be necessary for each chemical applied.

CHECK AND MAINTAIN GROUND SPEED

Except for the orifice setting, ground speed is the most significant factor affecting the application rate. Speed should be maintained carefully once the applicator has been properly adjusted. You can use the method given earlier in this unit for checking speed.

CALIBRATION OF GRANULAR APPLICATOR

A granular applicator must be calibrated for each different chemical that you apply. Any method of calibration is suitable as long as you end up with the applicator applying the correct application rate. The following method is suggested for most applicators:

1. Read the chemical container label to determine the application rate and particle size of the granules.
2. Check the Operator's Manual to determine the correct orifice setting for the recommended application rate and particle size.
3. Make a field check. This can be done in one of two ways. One way is to operate the applicator for a short distance in a field and collect all of the chemicals in a paper sack or cloth bag fastened on the hoppers. If, for example, you collect ½ pound from all of the hoppers while covering 1/20 of an acre, the application rate would be 10 pounds per acre. Another method that is less accurate but still useful is to proceed with the field application but check the amount used by each hopper while covering a known acreage.

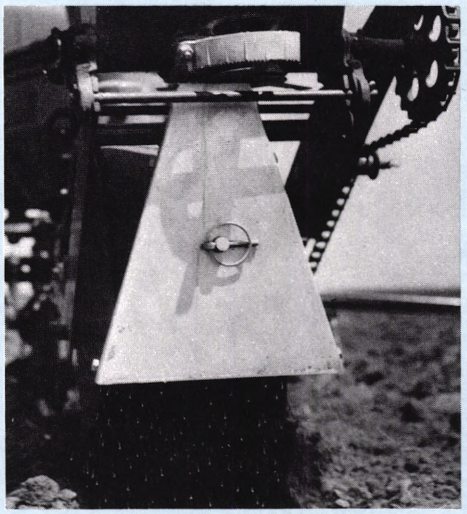

Fig. 15 A granular applicator attachment for a corn planter.

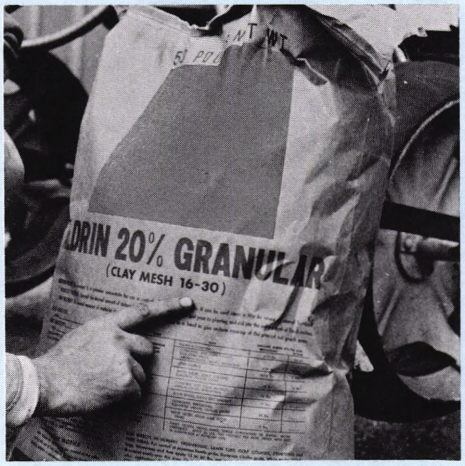

Fig. 16 Read the container label.

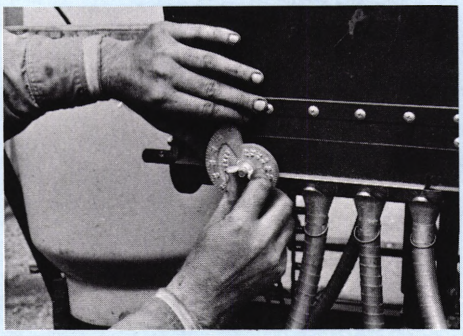

Fig. 17 Set the dial indicator for the desired application rate.

Fig. 18 Make a calibration run in the field, collecting the granules for a known acreage.

APPLICATORS FOR CHEMICALS

Select a sprayer or granular applicator for this unit. You will need the Operator's Manual to help you answer the questions and calibrate the applicator.

1. What unit did you select? _____ Size _____ .

2. List the chemicals used on your farm and tell what pests they are used to control. _____

_____

_____

3. How do you obtain a given application rate with the unit you selected? _____

_____

_____

4. How would the application rate be affected if the field speed were changed while traveling across the field? _____

_____

If you have a sprayer, answer the following questions. If you are using a granular applicator go on to the next section, starting with number 10.

5. Is the sprayer used for weed control, insect control, or both? _____

6. What kind of pump does the sprayer have? _____

7. How many screens or strainers are used on your sprayer? _____

Where are they located? _____

8. What kind of nozzles are used? _____ For what application rate were the nozzles intended? _____ How can you tell? _____

_____

9. Calibrate your sprayer, using only water in the tank. (Remember that: 43,560 square feet = 1 acre and 128 ounces = 1 gallon.)
Desired application rate _____ gal/acre. Desired speed _____ MPH.

Width sprayed by each nozzle _____ inches.

Desired flow rate from each nozzle _____ gal/min. = _____ ounces/min.

Use the space below to make calculations and tell about your experiences with this calibration problem.

_____

_____

_____

(Over)

Answer the following questions if you have a granular applicator.

10. Describe the applicator. _____

_____

11. For what purpose is this applicator used on your farm? _____

_____

12. What is the recommended application rate? _____ pounds per acre.

13. How far would you have to travel with your applicator to cover 1/10 of an acre? (Hint—divide 4,356 by width of the applicator) _____ feet.

14. How much of the chemical should be applied while traveling the distance needed to cover 1/10 of an acre? _____ pounds _____ ounces.

15. What speed is used while making application? _____ MPH

16. Where should the rate dial on the applicator be set to apply the recommended application rate?

_____

17. Tell of any experiences you have had in working with this applicator.

Perhaps you have even had a chance to make a field calibration. _____

_____

_____

_____

_____

_____

_____

_____

_____

_____

_____

_____

Note: Fill out this work unit, using your own machinery at home. Be ready to discuss your experiences with other 4-H members at your next club meeting.

MEMBERS' CHECK-UP

FOURTH BOOK UNIT 4 — APPLICATORS FOR CHEMICALS

Place the letter for the correct answer at the right of the page.

1. In applying chemicals it is important to (A—calibrate the applicator carefully) (B—guess at the proper rate and get the job done quickly). _____

2. (A—Piston pumps) (B—Gear pumps) are used for high pressure. _____

3. A flat fan nozzle has a (A—round pattern with a hole in the center) (B—rectangular pattern) (C—flat, oval-shaped pattern). _____

4. Strainers are used in sprayers to (A—keep the spray material properly mixed) (B—remove dirt and foreign particles). _____

5. A 40-mesh strainer has (A—1,600) (B—40) (C—80) holes per linear inch. _____

6. Increasing speed while spraying (A—increases) (B—decreases) the application rate. _____

7. Increasing pressure (A—increases) (B—decreases) the application rate of a sprayer. _____

8. Once you have a granular applicator adjusted for the proper rate you (A—never) (B—may) have to change the rate setting if you move to another field. _____

9. (A—Speed) (B—Time of day) (C—Temperature) is the most important factor once you have a granular applicator properly adjusted. _____

10. A careful field calibration is a good idea for (A—all chemical applicators) (B—only sprayers) (C—only granular applicators). _____

Note: This Check-Up Sheet is intended to test what you have learned and to stimulate discussion with the other members. The more you discuss these questions with your leader and the other members the more you learn.

SERVICING SEED PLANTERS

Fig. 1 A grain drill is one kind of seed planter.

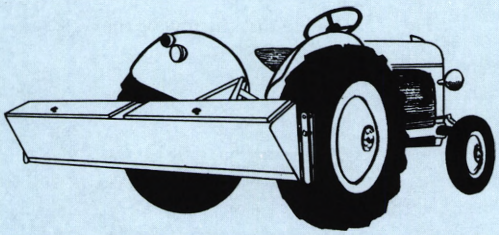

Fig. 2 A general purpose, single-hopper seeder (PTO-driven).

Fig. 3 Drilling must be uniform.

Fig. 4 A fertilizer grain drill.

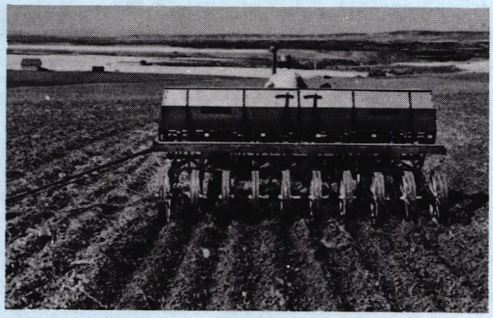

Fig. 5 A deep furrow grain drill.

Modern farming calls for careful drilling and planting of crops. To get big yields you must plant the right amount of seed. Drills and low-down seeders are used for smaller seeds and do a much more accurate job than broadcast seeders. Planters are used for larger seeds. A planter will space single seeds in a drill row, or groups of seeds in a check-row or hill.

All drills and planters work on similar principles. First there must be a furrow opener. There must be a hopper for carrying the seed. There must be a mechanism to select and drop the seed. The planting mechanism is where most drills and planters differ in the way the job is done.

Low-down and broadcast seeders place the seed on the surface of a prepared seedbed. The seed is covered by a light disking, by dragging, or by rolling.

GRAIN DRILL REQUIREMENTS

A drill needs to open furrows to a uniform depth. The seed must be dropped uniformly without injury. To complete the job the seed should be covered and the soil firmed over it. Adjusting levers control the depth of planting. Small seeds are usually planted very shallow, whereas large seeds are planted deeper. If small seeds are planted too deep, seedling plants use up all the food stored in the seed cells and die before reaching the soil surface.

THERE ARE SEVERAL KINDS OF DRILLS

Drills equipped for seeding small grain or beans are called plain drills. When fertilizer or grass-seeding attachments are used, they are called fertilizer grain drills or combination drills.

A seed drill equipped with a fertilizer attachment spreads fertilizer evenly beside the row. On some drills the fertilizer flows down the seed tube. On the newer drills the seeds and fertilizer are deposited in separate rows.

FURROW OPENERS DEPEND ON SOIL CONDITIONS

Three types of openers have been used—hoe, shoe, and disk. Sometimes various disks and corrugated sectional rollers are used for soil openers in sowing small seeds. Furrow openers are commonly spaced 6, 7, or 8 inches apart. In some areas where it is very dry, deep furrow openers are used. These are often spaced much wider than 8 inches.

Hoe openers with spring releases are especially suited for stony or root-infested fields. Shoe openers work well in poor or trashy soils.

Fig. 6 Three furrow openers: A - disk opener, B - shoe opener, C - hoe opener.

SERVICING SEED PLANTERS

Where considerable plant debris or trash mulches are used, disk furrow openers are favored. Single-disk openers ridge the seedbed. This helps prevent soil blowing. On contoured fields the ridges hold the rain. The seed delivery boots are designed to allow the moist soil from underneath to be the first to fall on the dropped seed. The heavy trashy cover is left on top.

Double disk openers are intended for even more accurate placing of seed in the soil. They are available in either straight or curved blades. The disks are fitted with scrapers to keep them clean.

Disk bearings must be kept lubricated and dust-free. This is difficult to do because the bearings are working so close to the soil. It is important to watch the bearing seals. Make sure they are tight. Lubricate the bearings frequently. Before putting a drill into use, examine the disk bearings. They may need to be removed and cleaned. Make sure the bearings are taking grease. Follow your Operator's Manual very closely in caring for drills.

Good sturdy seed hoppers are used on drills and seeders. Keep all bolts and connections tight. Make sure the hopper does not leak. Be sure to clean out the seedbox and fertilizer hopper before you store the drill.

The grain-drill hopper is fitted with either of two feeds, the "fluted force-feed wheel" or the "double-run feed." Both feeds are driven by the ground wheels which carry the weight of the drill.

FLUTED WHEEL FEED

The fluted wheel is driven by a square shaft. Fluted wheels can be shifted on the shaft so as to expose more or less of the gear. This changes the rate of seeding. On some drills that use a fluted wheel feed, the speed of the shaft can also be changed. Be sure to use your Operator's Manual when learning how to change the seeding rate. There is also an adjustable gate to fit the size of the seed.

DOUBLE-RUN FEED

The internal double-run feed has a double-faced wheel; one face has a larger opening for large seeds and the other face or side has a smaller opening for use with smaller seeds. A flapper gate in the bottom of the box is used to cover the opening not in use. If you want to sow small seeds you flip all the flapper gates over to cover the large opening. When planting extremely small seeds you can put a heavy curved wire into the opening. This cuts down on the size of the opening and reduces the amount of seed planted. The rate of seeding with the double-run feed is controlled by changing the speed of the internal seed wheels. The speed is changed by shifting a small drive gear so that it will mesh with a greater or smaller number of teeth on the driven gear.

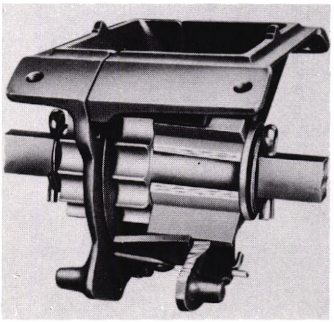

Fig. 12 Fluted force-feed.

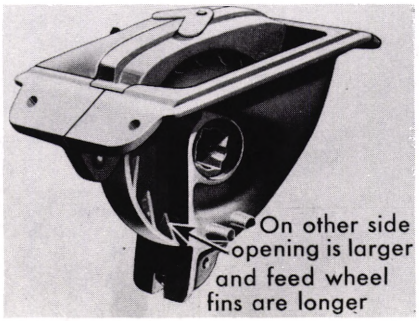

Fig. 11 Double-run feed.

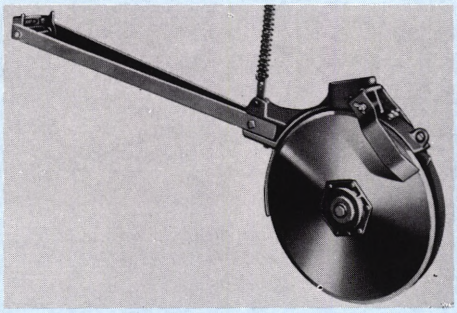

Fig. 7 Double disk furrow opener with scrapers.

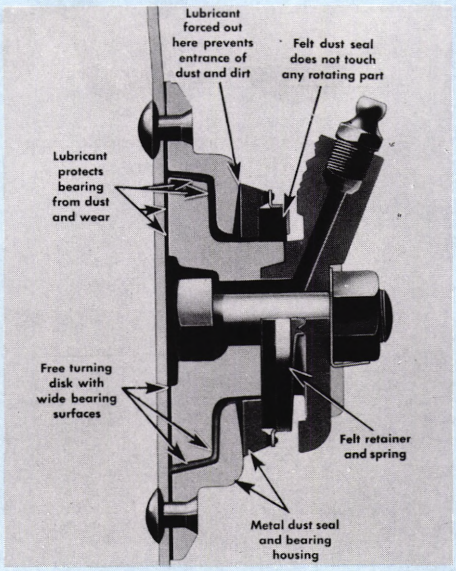

Fig. 8 Here's what disk bearings look like inside.

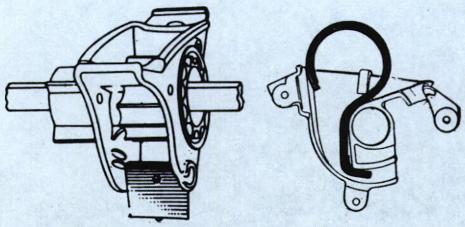

Fig. 9 Left — gate adjustment on a fluted feed; right — wire feed reducer for double-run feed.

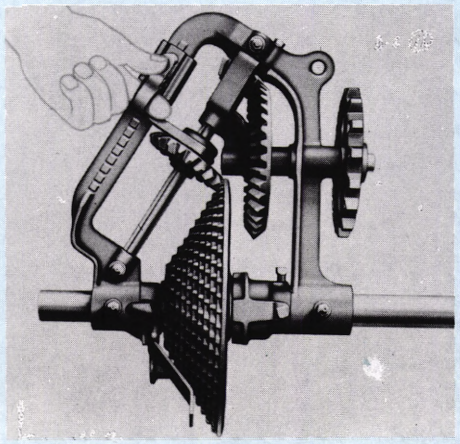

Fig. 10 Changing speed on a double-run feed.

SERVICING SEED PLANTERS

Fig. 13 Most grain drills have rubber tires.

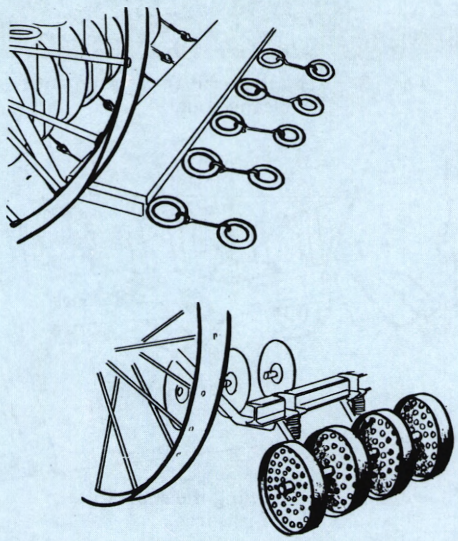

Fig. 14 Chain drag (top) or press-wheels (bottom) cover seed.

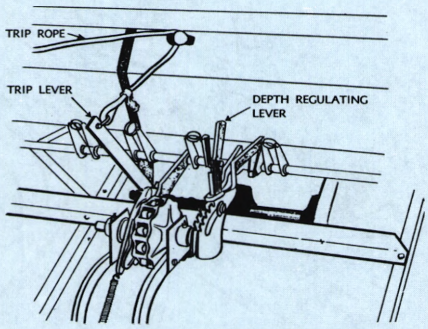

Fig. 15 Mechanical power lift.

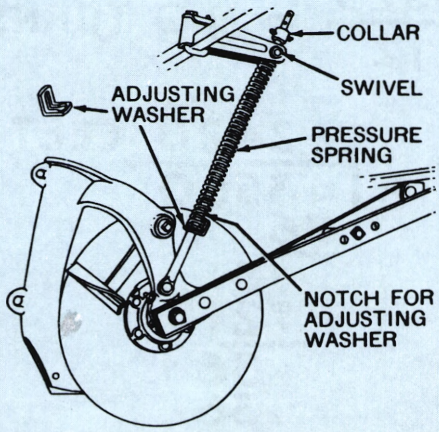

Fig. 16 Spring adjustment on a furrow opener.

Most seed-metering mechanisms are automatically shut off when the furrow openers are raised out of the soil.

SEEDING GRASSES AND LEGUMES

A grass-seeding attachment is often used on a grain drill. This attachment usually has a fluted feed for metering out the seed. Small flexible tubes carry the seed to the ground. The tubes can be set to put the seed either ahead or behind the furrow opener. Drag chains are used to pull a light covering of soil over the small seeds. Small seeds are seldom directed into the grain tube because the furrow opener would plant them too deeply. When the grass-seeding attachment is not in use it is a good idea to remove it from the drill and give it a good cleaning. Cover the working parts with oil or anti-rust material before you store the seeding attachment.

TAKE CARE OF YOUR TIRES

Most modern drills are mounted on rubber tires. This keeps the drill from being jarred unnecessarily on rough fields, and you can pull it faster going to the field or when planting. Be sure to keep tires inflated to the recommended pressure. Low pressures reduce the "rolling radius" at the wheel. This can cause inaccurate seeding because grain drills are ground-driven from the wheels.

Press-wheels behind the openers are rubber in many cases also. Damp soil does not ball up on rubber as it does on metal wheels. However, covering and firming the soil over seeds can be accomplished in a number ways. Chains, drags, and rollers of many kinds can be used.

POWER LIFTS MAKE DRILL OPERATION EASIER

The furrow openers can be lifted in one of three ways. The smaller drills have hand-lever lifts. Some tractor-drawn drills have power lifts like those on a plow. Newer drills are fitted with hydraulic cylinders for lifting furrow openers. The hydraulic cylinder may also control the depth of the furrow openers.

On some disk drills the disks are held in the ground by spring tension. On these drills you can often change the tension on the springs to suit the hardness of the ground. You may want to increase the spring pressure on those disks that follow the wheel tracks of the tractor.

PROPER HITCH HEIGHT IS IMPORTANT TOO

Adjust the hitch on your drill so that the grain box is level. If you hitch too low the furrow openers will not run deep enough. A slight backward tilt may cause the drill to go through trash better. When the hitch is too high the furrow opener may run too deep. A high hitch may improve penetration but it may cause the seed tube to plug with dirt.

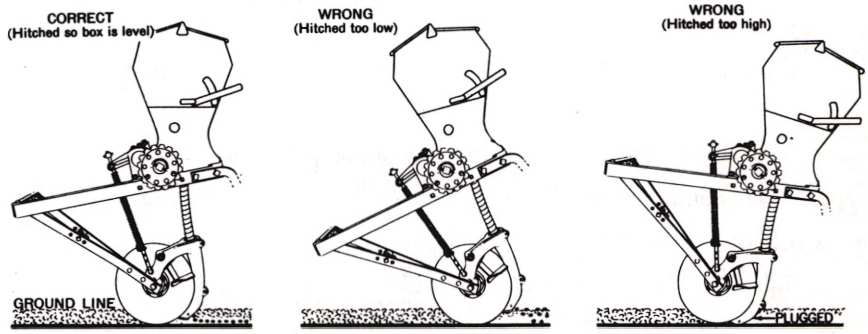

Fig. 17 How to hitch (and how not to hitch) a grain drill.

SERVICING SEED PLANTERS

CLEAN THE FERTILIZER HOPPER

Fertilizer is quite likely to collect moisture and cause rust if the fertilizer hopper is not cleaned out after it is used. To clean the hopper, remove the star wheels and clean the hopper and feed mechanism as best you can with a wire brush. Before storing the drill, wash the inside of the hopper and feed mechanisms with water. If you don't have a garden hose handy, use the hand gun on your farm sprayer. Use plenty of pressure. Allow to dry, and coat with a light oil or suitable rust preventive. Before starting to drill turn the seed and fertilizer shafts with a wrench to make sure they are free.

You can develop a good 4-H Club demonstration on cleaning the fertilizer attachment.

Fig. 18 Keep the fertilizer attachment cleaned out.

YOU CAN CHECK DRILL SEEDING RATES

The manufacturer calibrates a drill or low-down seeder when it is first built, and for most practical purposes the information is accurate. However, as a drill becomes worn and different seed varieties are used, the calibration on the machine becomes questionable. If you want to do more accurate drilling, the machine should be checked with the seed you intend to use. Here is how you might do it. (This makes an excellent demonstration.)

1. Measure the circumference of the drive wheel to see how many turns it would make in going, say 1,320 feet — a quarter of a mile. Suppose the circumference is 12 feet. Then the wheel would turn 110 times.

2. Measure the drilling width of the machine; say it is 18 feet. There are 43,560 square feet in an acre. Divide that by 18 and you would have to drive 2,420 feet to cover an acre, or 605 feet to do a quarter acre. To cover this distance would take 605 divided by 12 or about 50.5 turns of the drive wheel. Setting the drill for the correct amount in 45 turns allows for 10 percent slippage.

3. Jack up the drill so you can turn the drive wheels. Put a chalk mark on the tire or tie a cloth marker to a spoke. Tie paper bags on each seed tube. Fill the hopper with seed and set the "seeding rate" lever. Now you are ready to turn the wheel for the "distance" you want to check. (50.5 turns for ¼ acre).

4. Check the weights of the individual bags of seed against the total weight of seed collected. You can make sure all the parts of the drill are working properly in this manner.

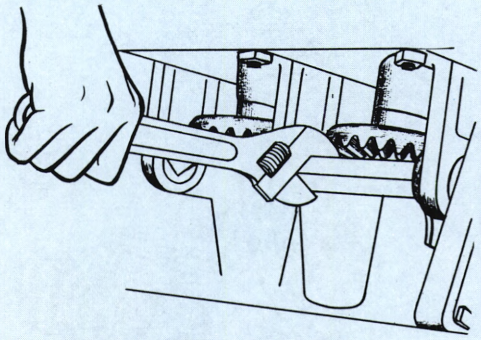

Fig. 19 Turning the shaft to see if it is free.

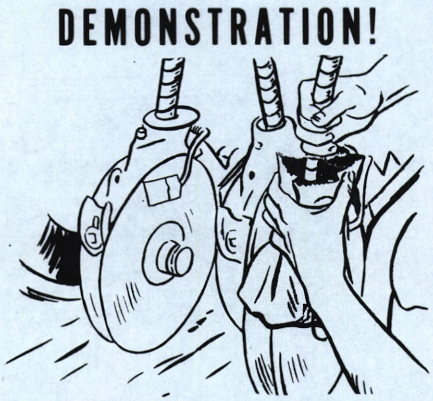

Fig. 20 You can check the drilling rate by tying paper bags on the seed tubes.

HOW TO FIELD-CHECK THE SEEDING RATE

Seeding rates can be accurately determined with a field-check. It is a good method to use for checking the accuracy of the calibration procedure described in the previous section.

To make a field-check, collect the grain seeded by the drill while traveling a distance of 40 rods (660 feet). The grain can be collected in sacks tied to the seed tubes. The application rate is then determined by the following formula:

$$\text{Application rate, pounds per acre} = \frac{\text{pounds collected X 66}}{\text{width of drill, feet}}$$

Now let's see how this works, using a sample problem.

Suppose 15.6 pounds of grain are collected while driving 40 rods (660 feet).

The width of the drill is 11 feet.

$$\text{Application rate, pounds per acre} = \frac{15.6 \text{ X } 66}{11} = 93.6$$

$$\frac{1320}{12} = 110 \text{ TURNS}$$

$$\begin{array}{r} 2420 \text{ FEET} \\ 18\overline{)43560} \\ \underline{36} \\ 75 \\ \underline{72} \\ 36 \\ \underline{36} \\ 00 \end{array}$$

Fig. 21

SERVICING SEED PLANTERS

Fig. 22 Corn planter.

Fig. 23 Fertilizer attachment — corn planter.

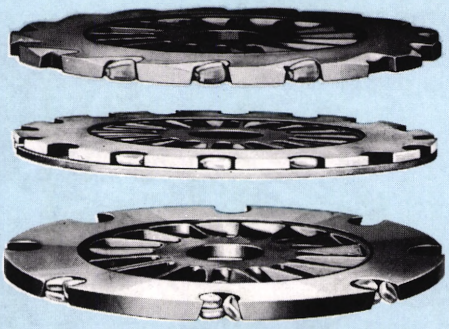

Fig. 24 Three seed plates: Top — edge-drop; middle — flat-drop; bottom — full hill-drop.

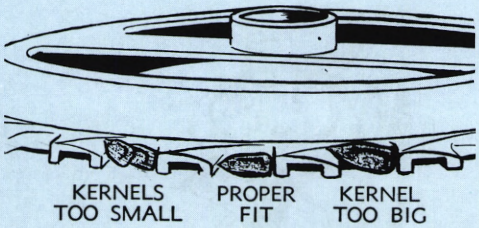

Fig. 25 Select the right seed plate for the seed you are planting. Sketch shows an edge-drop plate.

SEED TABLE–CROP SEED

Kind	Pounds per bushel	Number seeds per pound	Number of seeds per square foot to equal one pound per acre
Alfalfa	60	226,720	5
Bluegrass, Kentucky	15 - 28	2,150,000	49
Bromegrass	14	136,000	3
Clover, alsike	60	680,320	16
Clover, red	60	272,160	6
Clover, sweet	60	258,400	6
Clover, white	60	785,000	18
Flax	56	136,000	3
Lespedeza, Korean	25	238,000	5 +
Millet, foxtail	50	213,000	5
Millet, Japanese	35	140,480	3
Millet, broomcorn	50	81,600	2
Orchardgrass	14	586,000	13
Rape	50	109,000	2 +
Redtop	14 - 30	5,084,000	115
Reed canarygrass	45	680,320	16
Ryegrass, Italian	24	275,000	6
Ryegrass, perennial	24	336,000	8
Sudan	32	54,240	1 +
Timothy	45	1,133,900	26

Planters are used for row drilling or check-row planting of larger or more fragile seeds than those which normally go through grain drills. They do a more accurate and careful job with the larger seeds. Rows are far enough apart to allow cultivation. Like the drill, a furrow opener is needed on planters. Furrow openers are called runners. We also have planters that use a double plow arrangement for opening the furrow. We call these listers. They are used mostly in dry areas and on sandy bottom land.

PLANTERS WILL DO TWO JOBS

A hopper is used to hold the seed, and there may be a separate hopper for fertilizer. Fertilizer is usually applied near the seed. A special shoe and tube are used to place the fertilizer. Some planters have covering devices, but on most planters the packer wheel both covers and firms the soil over the planted seed. In some areas fertilizer is applied as a liquid.

PLANTER PLATES METER THE SEED INTO THE ROW

Seed hopper bottoms for row crops have rotating plates that receive the seed in holes or notches called cells. These are arranged in a number of ways to receive seeds either flat or on edge. The full hill drop receives in each cell — three or four seeds at a time. The accumulative drop takes one seed to each cell in the seed plate. Then it counts out the number of seeds to a hill as desired. After receiving the seeds the plate moves under a "cut-off." The cut-off allows only the seed in the plate cell to travel with the plate. There is usually a "knock-out" to push the seeds out of the plate in case they tend to stick. The seeds usually drop on a "valve" and remain until the valve is tripped like a trapdoor to drop the seed into the furrow or hill. The valves can be locked open when the planter is set for drill planting.

SERVICING SEED PLANTERS

In a planter with ribbon-type seed tube, used for vegetables or close-growing row crops, it takes considerable time for the seed to bounce down the tube. In the so-called precision and later model planters this ribbon tube has been replaced with a short, smooth tube or housing, and the valve mechanism has been improved or eliminated in some instances. Such a planter then becomes a very accurate machine. It will plant coated and other seeds with precision and can be used in a number of ways with a variety of seeds.

HERE'S HOW YOU CAN CHECK YOUR PLANTER

When you are getting ready to plant, it will pay to first set the planter on a concrete slab or smooth floor and inspect it carefully. Block up the wheels and the hitch so that shoe openers or runners will be in planting position. On tractor-mounted planters, block up the tractor wheel equal to depth of planting. See that all moving parts work freely and are not fouled by rust or dirt. Worn bearings will sometimes allow teeth to drop out of mesh. Check drive chains and sprockets for wear and looseness. Check the clutch and variable drop gears. Chains that are too loose crawl up on sprockets, waste power and can be broken. Install chains to run with link hooks forward and link slot to the outside. Chains should run loose and yet not climb sprockets. Worn furrow openers or runners will cause scattering of seeds. Check the tightness of bolts and those that are worn. See that all parts are in alignment and that the frame is not sprung. You will want to put some of your planting seed through the planter to check it for accuracy of drop and plate size. Do this before going to the field, and then field-check it also. Don't wait for the crop to see if your planter has done a good job.

HILL SPACING CAN BE ADJUSTED

Most planters can be set to plant 2, 3, or 4 kernels per hill. When drilling, a wide range of spacing can be obtained by using plates with varying numbers of seed cells. Adjusting the variable drop setting and using the drive chain on the large, medium, or small sprockets will also change the spacing. See your Operator's Manual.

DON'T TRY TO MAKE "ANY OLD PLATE" WORK

Cracked seeds will not germinate. You should plant certified seed. The seed house will recommend plate sizes for the seed they furnish, but you need to check their recommendations under your conditions. Plate openings that are either too small or too large will cause seed cracking. Binding of rusty or dirty moving parts will cause cracking troubles, as will badly worn knockouts. Plate holders put in upside down can also cause cracking. Heavy oiling or greasing of exposed parts is not recommended. Light oiling is needed for many parts to "limber up."

CHECK PLANTING RATES

Accurate planting is necessary for high yields. Use a seed corn test stand to select the proper plates for your seed. Make sure the plates are matched to the seed for the speed you want to drive. You can also check your planter by driving down a lane or roadway at planting speed and checking the average kernel spacing. Leave the runners up, but lock the valves open and engage the seed plate drive. Count the total number of kernels dropped in a given distance and figure the average kernel spacing. If you use 40-inch rows, divide 156,800 by the average kernel spacing and you will get the number of kernels planted per acre. If you find your planter drops 36 kernels in a distance of 30 feet, that's an average of 1 seed every 10 inches. When 156,800 is divided by 10 it gives a planting rate of 15,680 per acre. For 36-inch rows use 174,000; for 38-inch rows use 165,000; for 42-inch rows use 149,000.

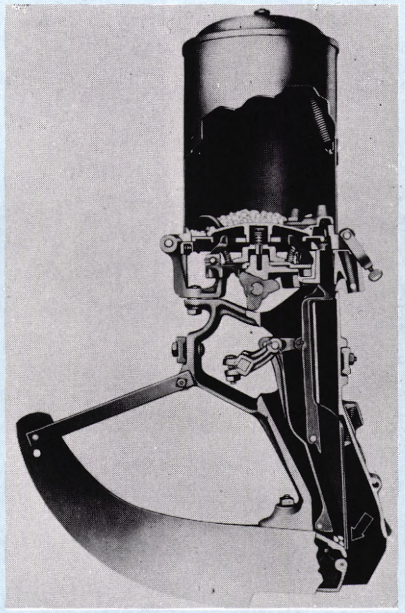

Fig. 26 High-speed planter mechanism—arrow shows three seeds about to be released.

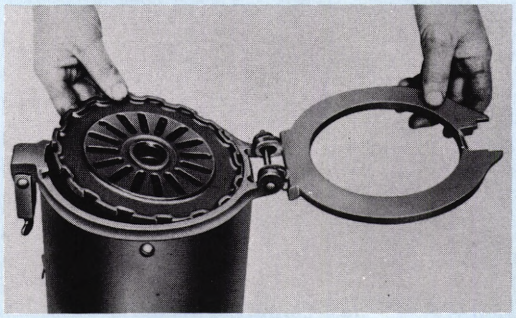

Fig. 27 Checking the seed plate on a planter.

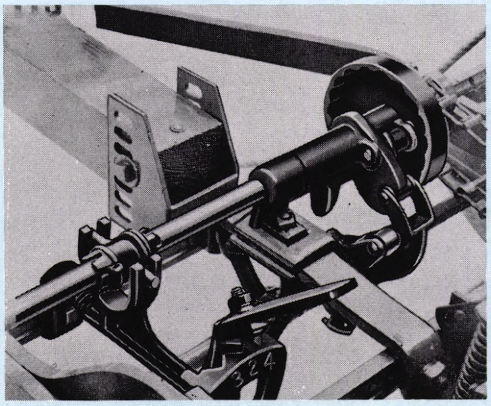

Fig. 28 The variable drop lever on a corn planter determines the number of kernels per hill.

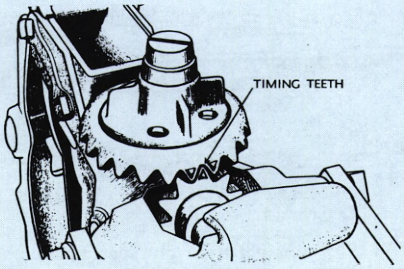

Fig. 29 Timing teeth on a corn planter.

WORK UNIT
Fourth Book Unit 5

SERVICING SEED PLANTERS

Select a drill or planter for this unit or add another sheet and work on both machines.

1. Machine selected _____ Make _____ Model _____ Size _____

2. What crops are planted or seeded with this machine on your farm? _____

_____

3. Trace the flow of power from the drive wheels to the point where seed is metered from the hopper. Make a simple sketch of this power train, using arrows to show the direction from one part to another. Label the parts.

4. What kind of furrow openers are used? _____

5. How is the depth of the openers controlled? _____

6. How is seed taken from the hopper? _____

_____

7. What keeps the seed from being cracked as it leaves the hopper? Do some seeds crack easier than others? Explain. _____

_____

_____

8. How is an accurate seeding rate obtained? _____

_____

_____

(Over)

9. How is the seed placed in the soil? _____

_____

10. How is the furrow closed after the seed is dropped? _____

_____

11. What devices are used by the machine for making a good seedbed, both before and after the seed is dropped? _____

_____

_____

12. How is the seeding rate changed? Be sure you list all of the different methods you can find on the machine. _____

_____

_____

13. Calibrate the machine and report your findings. Report the type of seed calibrated, the calibration method used, the seeding rate you wanted, the seeding rate you obtained, and explain how you could be sure the machine is calibrated properly. _____

_____

_____

_____

_____

_____

14. If your machine has a fertilizer attachment, explain how it can be adjusted to apply the correct amount. _____

_____

_____

_____

15. List the lubrication requirements of the machine. _____

_____

_____

Note: Fill out this work unit, using your own machinery at home. Be ready to discuss your experiences with other 4-H members at your next club meeting.

MEMBERS' CHECK-UP

FOURTH BOOK UNIT 5 — SERVICING SEED PLANTERS

Place the letter for the correct answer at the right of the page.

1. Drills work better with disk furrow openers because: (A—rolling friction makes the drill pull easier) (B—disks work better in soft, loose ground) (C—disks will cut through trash and give more uniform depth to the planting). _____

2. Rubber tires are used on drills: (A—so as not to pack the seed too tightly) (B—because damp soil will not stick so readily and the rubber mounting is easier on the machine being carried). _____

3. A double-run feed: (A—drills twice as fast as a fluted-wheel feed) (B—has two sides of different sized pockets for large or small seed) (C—exposes more of the gear for increasing the rate of seeding). _____

4. Planters work very much like drills: (A—except for the selection of seed from the hopper and dropping it into the seed tube) (B—except that planting is all done in hills and the crop must be cross cultivated). _____

5. Planters should be cleaned after use: (A—because the valves might stick overnight and cause trouble) (B—particularly after fertilizer has been used in them). _____

6. A planter seed mechanism: (A—should be lubricated sparingly) (B—should be oiled and greased liberally every day). _____

7. A planter is said to be an edge drop: (A—when the seed is dropped on edge in the soil) (B—when the seed is held on edge by the plate in the bottom of the hopper) (C—when all the seeds accumulate in one cell). _____

8. A "knockout" is used: (A—to kick the seed out of the hopper) (B—to clear each hole in the plate ready for the next seed to be selected) (C—to make chains easy to unhook). _____

9. A precision-type planter uses a straight, short seed tube because: (A—the ribbon tube breaks seeds) (B—otherwise the seed is delayed in bouncing down the ribbon tube). _____

10. A corn planter with a 40-inch row spacing drops an average of 1 kernel every 10 inches. The number of kernels planted per acre is (A—14,900) (B—156,800) (C—15,680). _____

Note: This Check-Up Sheet is intended to test what you have learned and to stimulate discussion with the other members. The more you discuss these questions with your leader and the other members the more you learn.

Fig. 1 Never walk in front of a mower, shortie!

CUTTERS FOR CROPS

Cutting a crop on time is important. Much of it can be lost if the work is delayed by a machine's breaking down. Sharp cutters are necessary for fast, easy cutting; yet sharp cutters can be hazardous. Therefore be careful when working around mowers or cutters of any kind. Be sure the cutters are out of gear whenever you work on them. Be especially careful when sharpening them. Use goggles when working with a grinding machine. Be sure all shields for gears, shafts, and cutting parts are in place.

WHY CUT CROPS

We know the livestock we feed is well equipped by nature to grind and chew most forage crops. If livestock doesn't need the crops chopped, then why do we cut and chop the material? The answer to this question is that we do this to save labor, to save storage space, to aid in curing, and to keep the crop from spoiling while in storage.

We mow hay so it will wilt and cure to a safe moisture content for storing. We windrow small grain so that the crop will cure evenly. If the crop is weedy, windrowing causes the weeds to dry. This makes it easier to separate the grain when the crop is picked up with the combine.

But why do we chop hay? One of the main reasons is to make it easier to handle with mechanical equipment. Another reason is that chopped hay can be put in storage with a higher moisture content, especially when put into the silo or dried with an artificial drier.

Hay loses some of its feeding value when it dries in the field. Chopping and storing the hay shortly after it has been cut eliminates some of the feeding-value loss. Chopped hay is easy to feed and the livestock may waste less of the chopped hay.

Now, why chop corn or sorghum or green hay for silage? There are several reasons. We can handle the chopped materials by labor-saving mechanical methods. The shorter the length of cut, the easier the silage is to pack. Air is excluded and the silage keeps better.

Fig. 2 A forage harvester.

Fig. 3 A self-propelled windrower.

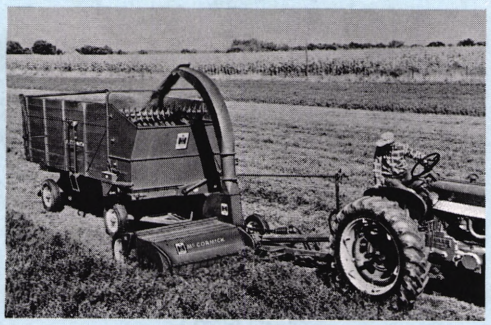

Fig. 4 A flail chopper.

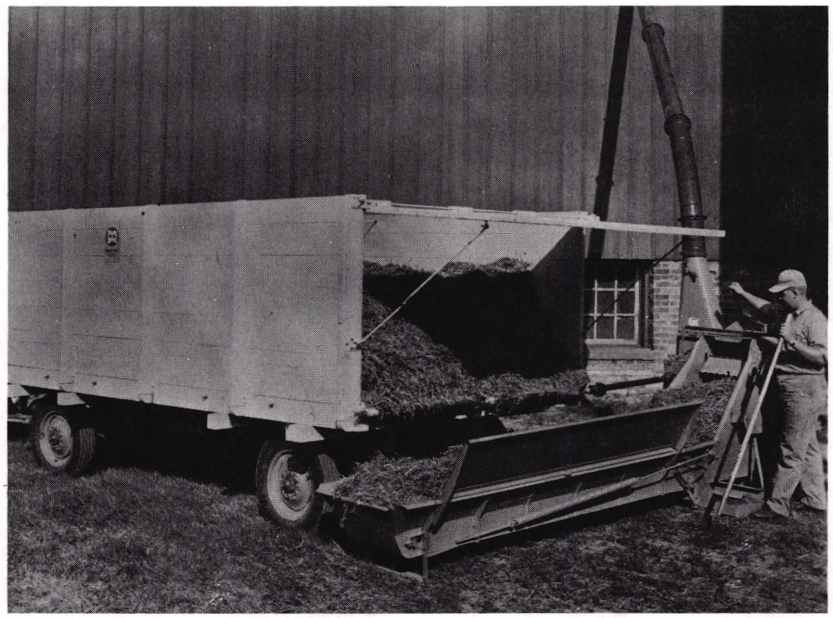

Fig. 5 Blowing forage into storage.

CUTTERS FOR CROPS

SHEARS ARE CUTTERS

Most farm machines with cutting elements use a shear cut. Metal knives, sliding over a square-edged shear bar, like a pair of scissors, do the cutting. Scissors or grass shears are common examples. They work best when the two blades are sharp and are adjusted close to each other.

For your first demonstration, show that you know how to sharpen a pair of scissors, a pair of tin snips, pruning shears, or a pair of grass shears. A grinder, a file, or an oilstone can be used to put a fine edge on the blades. Tighten the blades, but be sure they are free to work against each other without dragging. Put the handle of the file in a vise. Gently pass the edges and inside surfaces of the blades across the file. Don't try to sharpen the bearing inside of the blade where the blades are fastened together. If you do so you will ruin the shears. Be careful to keep a straight cutting edge. Oil the bearing surfaces to make them slide over each other better.

Good hard steel will hold a sharp edge better than poor or soft steel. It will take more work to sharpen a good tool but the edge will last longer.

Use oil to smooth the close-fitting joints and prevent rusting.

You should learn from this demonstration the importance of keeping the cutting edge sharp. The cutting edges must also be held close together. This principle is the same for all cutting tools: a sharp knife that passes close to another knife or shear plate.

LAWN MOWERS ARE CUTTERS

It's important for you to understand the lawn mower because many farm machines use the same idea for crop cutters. Many ensilage and forage harvesters have cutter heads resembling that of a lawn mower. They cut by shear and impact. We'll talk more about kinds of cutting later. Without a special sharpening tool it is difficult to get a true sharpened edge on lawn-mower cutter knives. They have curved blades that are fastened in a spiral form in a round frame. Fortunately, almost any sharpening job is better than none at all. Therefore, when you have a mower that just won't cut, try sharpening it yourself. Use a mill file and work from behind the blades with *forward* strokes. After you get the proper feel, you will discover the knack of working lengthwise on the blades.

After the blades are sharp, sharpen the shear bar. At each end of the shear bar are adjusting screws. Tip the shear bar toward the revolving blade by adjusting the screws so that all the blades just touch the bar. The blades should touch for their full length. If one blade drags more than the others or if you find high places on a blade which cause heavy drag, correct this trouble by more filing.

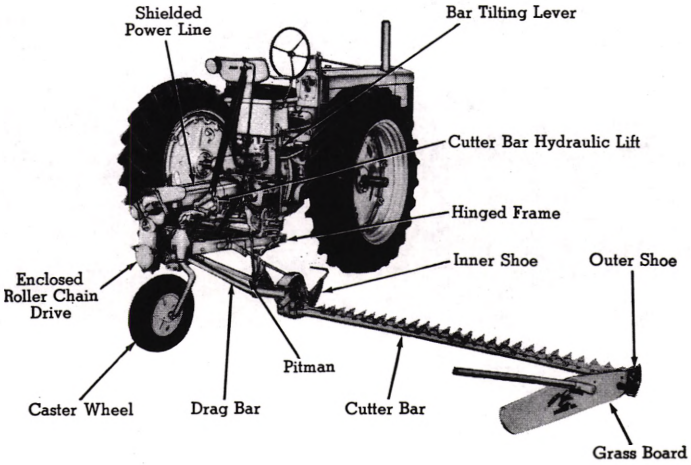

Fig. 9 Sickle on a mower.

DEMONSTRATION!

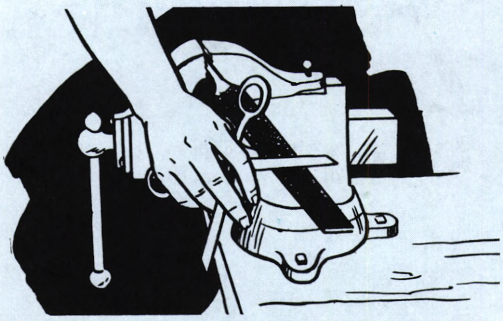

Fig. 6 Sharpening shears.

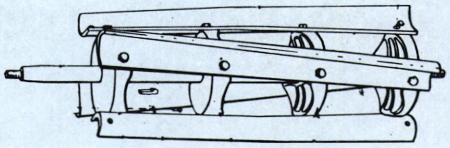

Fig. 7 This is a cylinder cutter used in a forage harvester — looks like a lawn mower.

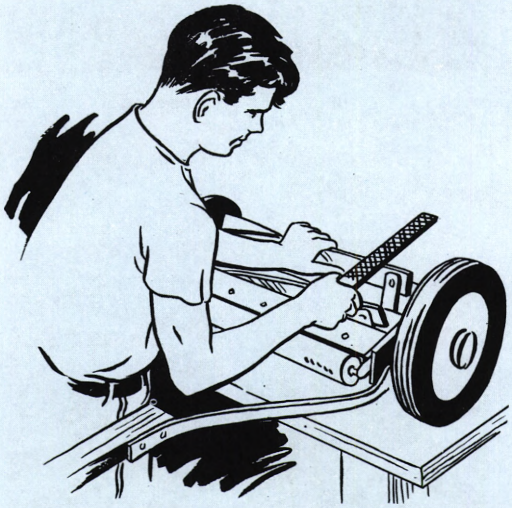

Fig. 8 Sharpen your lawn mower cutter knives.

CUTTERS FOR CROPS

Fig. 10 A little care — and the mower cuts like new.

Fig. 11 How to adjust the shear bar on your lawn mower.

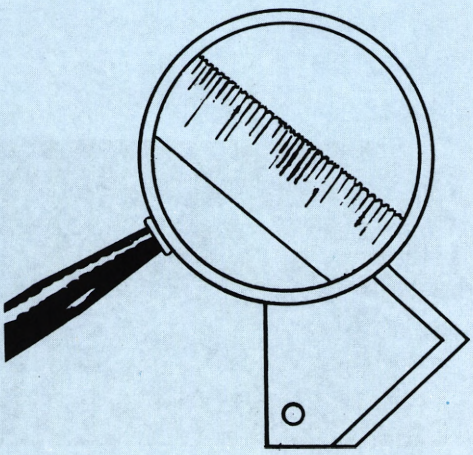

Fig. 12 Knife sections on a combine or grain binder have corrugated edges — why?

A little sharpening, adjusting, and oiling of an old lawn mower will make it cut like new. This is one job where you can get first-hand information on how much easier a sharp, properly adjusted, and properly lubricated machine will run. Now let's check to see how many implements you have on your farm that have cutters and need your help.

TYPES OF CUTTING PARTS ON MACHINES

You will find that there is a large number of common farm machines that have cutting parts. These cutting parts include sickles on mowers, binders, combines, forage harvesters, and the like.

The sickle is the most commonly used cutting machine. It has a double-edged cutting action. The sickle is a metal bar on which are mounted triangular-shaped sections. The edges of the sections are sharpened. Mowers and haying tools that are used to cut the heavy, coarser crops, use larger sections which you may grind to sharpen.

The sickles on the combine, windrower, and grain binder use corrugated edge sections. The length of stroke is often longer and sometimes the section passes over two guards on one stroke. The sickle edge is rough or serrated to help keep the straw from slipping while it is being cut. The serrated sections can't always be sharpened. They may need to be replaced when they become dull.

To obtain a good cut, the knife holder must fit down snugly on the knife. Such a fit holds the knife close to the guard plate. A tight fit is also needed to keep from breaking the sickle head. A badly worn wear plate or a loose knife holder may allow the sickle to bend. This is a common cause of the sickle head's breaking at the point where it attaches to the bar. Later when we discuss mowers we will tell you how to adjust the cutter bar.

CYLINDER CUTTERS

The cylinder cutter is in common use. The cutting edges are spiral shaped, and are bolted onto a revolving frame. The cylinder looks something like the reel-type of lawn mower. Cylinder cutting blades or knives can be sharpened by use of special attachments without being removed. Sharpening without first removing them is a timesaver for the farmer.

Take care, when sharpening any knife with a grinder, that the knife edge does not get overheated and lose its hardness. Also, be careful to grind the bevel of the edge to the same angle it originally had.

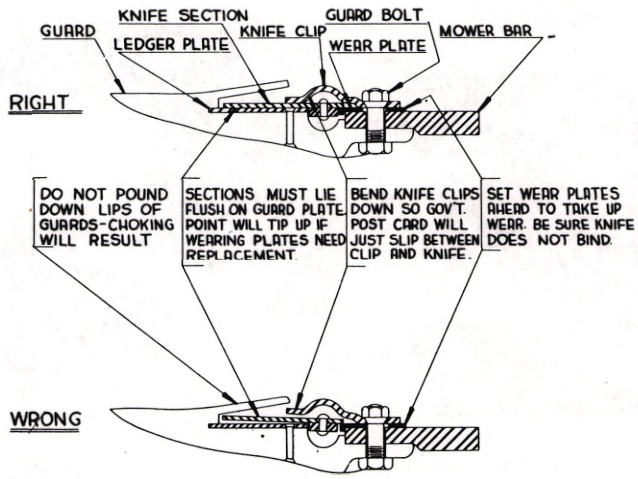

Fig. 13 The right and wrong of setting knife, knife holder, guard, and wear plate.

CUTTERS FOR CROPS

Several of the popular makes of field forage harvesters use the cylinder type of cutter. You will find them on some stationary ensilage cutters and even on some roughage grinders.

The length of cut can be varied and depends upon how much of the crop is fed under the knives between cuts. Changing the speed of the feed roll is the most common method of changing the length of cut.

FLYWHEEL CUTTERS

The flywheel cutter has knives mounted radially on the blower fan of the machine. It is used on field forage harvesters and ensilage cutters.

To obtain a clean cut the knives must operate close to the shear plate. They can be adjusted for clearance. The length of cut can be changed by: (1) changing the speed of the feed rolls; (2) changing cutterhead speed; (3) varying the number of knives used. The knives should be removed for sharpening. Be sure to grind at the same bevel as when the knives were new.

Other cutting elements you will find on farm machines are rotating knives. Sometimes these knives rotate in the vertical plane. You will find them on sugarbeet toppers, stalk cutters, and in one instance, on a field forage harvester.

Cutting knives that rotate parallel to the ground are used to chop corn stalks, cotton stalks, and the like. They are used to destroy brush, weeds, and other heavy plant growth which cannot be cut with a conventional mower. Horizontal rotating blades are used as grass and weed cutters as well as for topping sugarbeets and cutting up cotton and corn stalks or other heavy plant growths before plowing the land for another crop.

On some of these machines the blades are sharp, while on others they are left dull and depend upon impact or battering for the cutting action. A mower section may be mounted on the end of a bar to provide the cutting action.

MOWERS

Having worked on cutting shears, you already know what to look for in adjusting a sickle bar. First you want sharp sickle sections. Next you want the sickle bar to slide easily. And finally you want the sickle sections to be held in place so they work close to the ledger plates fastened to the mower guards.

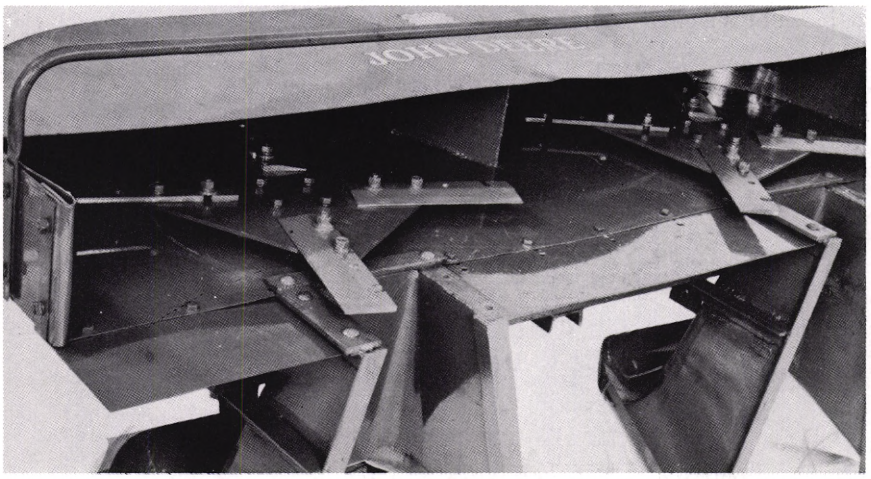

Fig. 17 Some cutters have knives that rotate parallel to the ground — as in this stalk cutter.

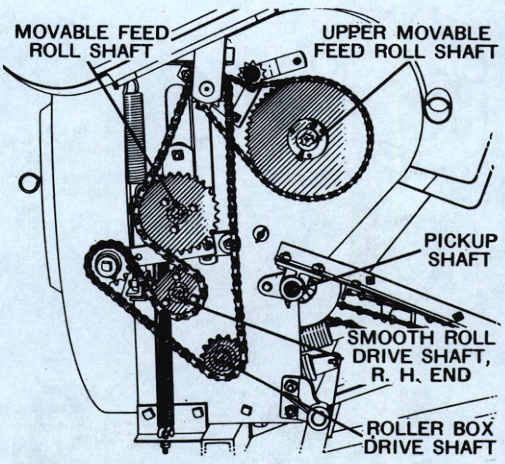

Fig. 14 On this hay chopper, length of cut is changed by changing sprockets shown above (and chains).

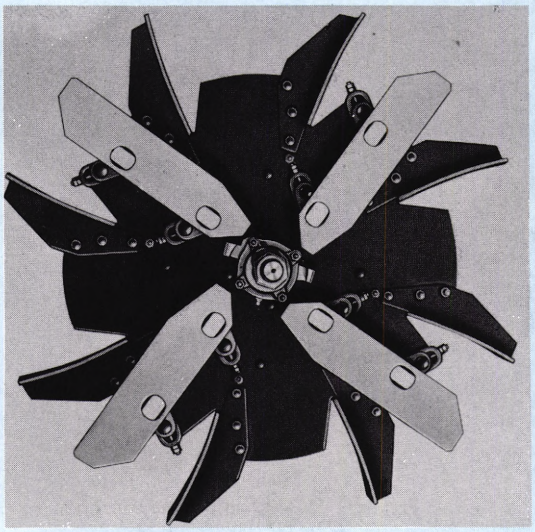

Fig. 15 Some cutters have radial knives mounted on a fan — as in this ensilage cutter.

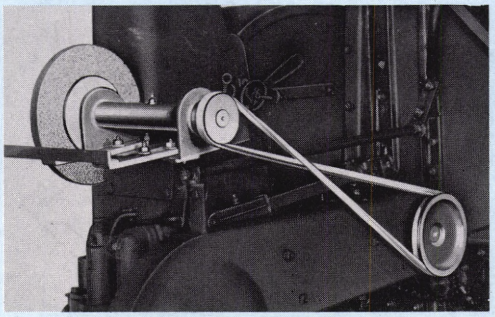

Fig. 16 A knife grinder attachment for the knives shown in Fig. 15.

CUTTERS FOR CROPS

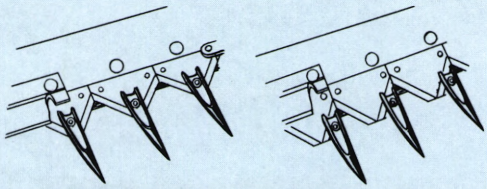

Fig. 18 Mower knives in register (left) — not in proper register (right).

Fig. 19 One of the high-speed tractor-mounted mowers.

DEMONSTRATION!

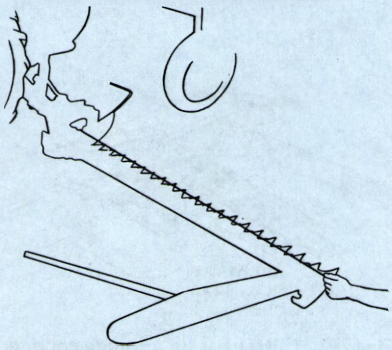

Fig. 20 How to measure lead on the cutter bar.

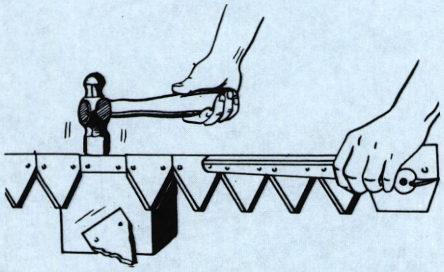

Fig. 21 Removing a knife section.

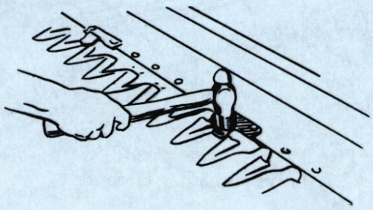

Fig. 22 Bending knife holders down.

MOWER ADJUSTMENTS

The sickle sections cut first in one direction then in the other. As the pitman arm moves the sickle back and forth, the center of the sickle section usually stops at the center of the guard on each stroke. This is called register. On many mowers the cutter bar can be moved or adjusted to give proper register.

On some of the later model, high-speed, tractor-mounted mowers, a short length of stroke is used to give better balance. These mowers do not have register such as found on earlier models.

On most mowers the outer end of the cutter bar is carried a little ahead of the inner end. This is done so that as the mower bar is pulled through the crop, the outer end will align with the inner end. This is called "lead" and gives better cutting. The sickle and pitman arm will then run in a straight line. On some of the later model tractor mowers the driving mechanism is mounted on the inner end of the cutter bar. With this mower, lead is of less importance.

As the mower bar wears, the lead may need to be checked and adjusted. To measure the lead on the cutter bar, first get the mower into proper cutting position. Tie a heavy cord to a point on the pitman box. Stretch the cord to the outer end of the cutter bar and sight it in with the pitman. The cord should be parallel with the pitman arm. Pull back on the outer end of the cutter bar and see how it lines up. A good rule is to have the outer end of the cutter bar leading the inner end by about ¼ inch for each foot of cutter bar length. (Check your Operator's Manual for details.)

There is a grass board on the outer end of the mower which causes the cut crop to fall toward the cut swath. The angle of the board can be changed for different crops. Proper setting of the board will help keep the cutter bar from plugging.

REPAIRING YOUR MOWER

It is easy to replace most of the wearing parts on a sickle used on a mower, combine, binder, and the like. The rivets holding the sickle sections can be sheared by hitting the back side of the section a sharp blow with a hammer. The rivets can then be punched out and new sections riveted in place. The guards on a mower are held in place with one bolt for each guard. On a combine or binder, two or more guards are made in one piece. They can be removed for straightening and replacement. A special metal block for holding the guard is a big help when straightening the mower guard or replacing the ledger plates.

If badly worn, the knife holder and wearing plates can be unbolted and replaced. If the knife holders are high they can be bent down by hitting them with a hammer. Before you do this, remove the sickle. If the knife binds when the sickle is replaced, it can be bent up by giving it a light, sharp tap in the center section with a hammer. Leave the sickle in place when bending the knife holder up.

The points of the guards should be kept in alignment so that the ledger plates will be at the same level. If a guard is bent you may be able to straighten it by slipping a short piece of pipe over the end of the guard, then bending the guard up or down. When cutting grain or grass you may need to put lifter guards of some kind on the cutter bar to keep the cut crop from collecting on the cutter bar.

CUTTERS FOR CROPS

The clutch shifter lever can usually be adjusted for wear. See that it engages all the way. Keep it free of dirt. See that all driving parts as well as the cutting parts of the mower are regularly cleaned and lubricated. Change the lubricant in the gear box regularly. (See your Operator's Manual.)

Most tractor-mounted mowers have a safety slip clutch. You should inspect the clutch to make sure that it is working. It also has a shielded power line back to the pitman crank. Another safety spring release allows the cutter bar to swing back if it hits an obstruction. These need to be checked as does the lubrication. The system of cutting is the same as on a drawn mower or grass shears.

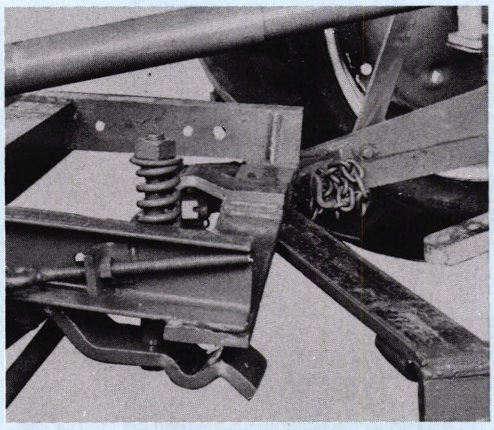

Fig. 23 A safety spring release.

CORN HARVESTERS

The corn binder and field forage harvester with row-crop attachment have the same kind of cutter found on a mower. Only one section is used on the sickle. Two side-cutting knives assist the cutting action. The side-cutting knives must be sharpened often because they operate in dirt. The beveled edges are placed downward. The sickle head can be adjusted for wear. If you have an ensilage harvester, it's well to keep a spare sickle section on hand. You will get good experience by sharpening the sickle and knives on your corn-harvesting implements. See that all chains are properly adjusted. Lubricate the machine. Study your Operator's Manual.

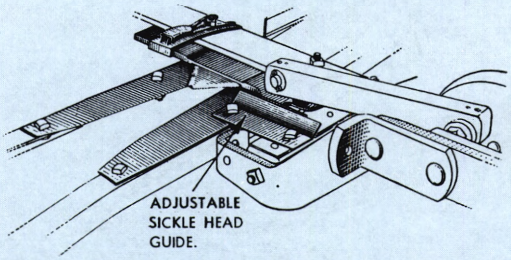

Fig. 24 Cutter bar on a forage chopper.

FIELD FORAGE HARVESTERS

Your ensilage and hay cutters may have either the lawn-mower type of blades, or radial knives working against a shear bar. In either case, you should see how they work and what is needed to sharpen and adjust them.

On the lawn-mower type of cutter, the shear bar is usually adjustable, just as it is on a lawn mower. In the radial type of cutter for silage or hay, the straight blades can usually be adjusted closer to the shear bar. On many of these cutters, the shear bar can be turned over when one edge becomes rounded from wear.

Again, like scissors, the blades need to be sharp. They need to be adjusted up to the stationary shear bar. They need to be driven at the right speed (see your Operator's Manual), and the machine needs to be lubricated and protected from rust and careless use.

You may have other machines that have a cutting mechanism. On some hay balers a knife is used to cut the hay as it enters the compression chamber. Your Operator's Manual will tell you how to adjust and care for the hay baler.

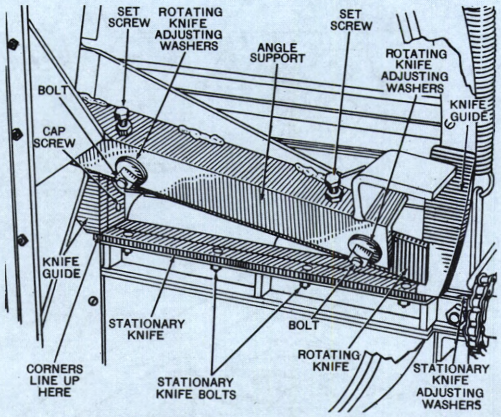

Fig. 25 Adjustments for setting the knives on a hay chopper.

Fig. 26 Hay baler at work.

For this work unit you may use a mowing machine or forage harvester or both.

Mowing machine

1. What type of mower did you observe? _____ Width of cut _____

2. Tell how power is transmitted to the sickle. _____

_____

3. Diagram the cutter bar and sickle in cross section.

4. Tell how lead is adjusted. _____

_____

5. Describe or diagram how register is adjusted.

6. How is knife head guide to knife head clearance adjusted? _____

_____

Why is this adjustment important to the conventional pitman mower? _____

_____

_____

7. Describe or diagram any safety device in the power line.

8. Describe or diagram safety protection for the bar if it should strike a post or other obstruction.

(Over)

Forage harvester

1. What type of forage harvester did you observe? _____

2. Is it engine driven or a PTO model? _____

3. What is the dimension of throat opening? _____ height? _____ width? _____

   area, square inches (height x width) = _____ sq. in.

4. List the parts through which power is transmitted between tractor PTO or engine and cutter head.

   _____

   _____

   Between engine or PTO and feeding mechanism. _____

   _____

5. Tell what lengths of cut can be obtained. _____

6. For what length of cut is the machine now adjusted? _____

   How was this determined? _____

7. What adjustments must be made to get the longest length of cut? _____

   _____

8. Does the pick-up cylinder reverse when the feeding mechanism is reversed? _____

   If not, why not? _____

9. How are the knives sharpened? _____

   _____

10. What is the bevel angle of the cutting edge of the new knife? _____

11. How is each knife adjusted to the shear bar? _____

    _____

    What should the clearance be? _____

12. What changes or adjustments can be made to the shear bar or stationary knife? _____

    _____

    _____

13. What is the maximum and minimum cutter-head speed in revolutions per minute?

    Maximum _____ rpm. Minimum _____ rpm.

Note: Fill out this work unit, using your own machinery at home. Be ready to discuss your experiences with other 4-H members at your next club meeting.

MEMBERS' CHECK-UP

FOURTH BOOK UNIT 6 — CUTTERS FOR CROPS

Place the letter for the correct answer at the right of the page.

1. On some of the high-speed, tractor-mounted mowers a (A—shorter) (B—longer) length of stroke is used to give better balance. _____

2. When adjusting a cutting mechanism: (A—the shear bar should have 1/8 inch clearance) (B—the shear bar should be set close to the knife) (C—the back side of the shear bar should be ground). _____

3. The hammers in a hammermill cut by: (A—shear) (B—slice) (C—impact). _____

4. Crops are cut fine so that: (A—animals can do a better job of chewing) (B—so that the crop can be easily handled with power equipment) (C—so that the weeds will be better mixed). _____

5. When sharpening shears: (A—the blades should be ground square) (B—the blades should be rounded) (C—the blades should be ground at a slight angle). _____

6. A crop cutter is: (A—safe when it is properly guarded) (B—never completely safe) (C—safe when someone else is around). _____

7. The lifting spring on the cutter bar: (A—helps to hold it down) (B—helps to make the bar and sickle register) (C—helps in lifting and takes weight and wear off the outer shoe). _____

8. By lead we mean that: (A—the outer end of the cutter bar is slightly ahead of the inner end) (B—the sickle sections stop in the center of the guard) (C—the sickle passes close to the ledger plates). _____

9. A spring release is used to: (A—allow the cutter bar to swing back when striking an object) (B—allow the mower to be thrown into gear without stopping) (C—brush trash off the cutter bar). _____

10. On a rotary cutter: (A—the blade should be kept sharp and operated at high speed) (B—the blade should be kept sharp so it can be operated at slow speed) (C—the shield should be removed so that crops will feed in better). _____

Note: This Check-Up Sheet is intended to test what you have learned and to stimulate discussion with the other members. The more you discuss these questions with your leader and the other members the more you learn.

SEED SEPARATION

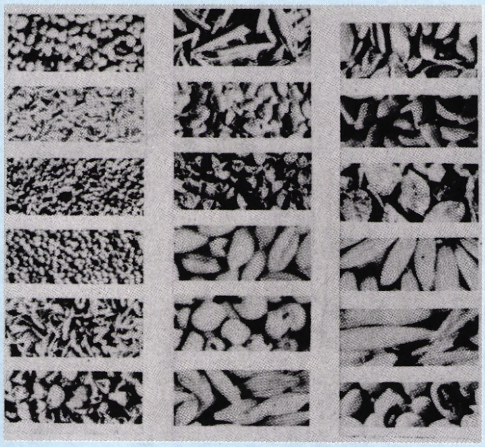

Fig. 1 Can you identify any of these seeds?

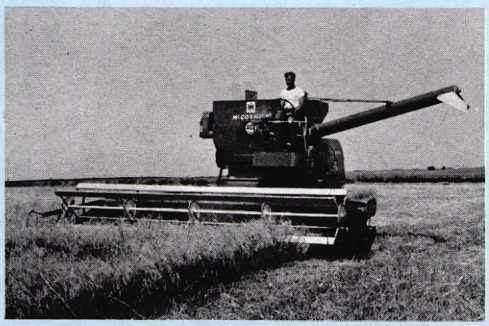

Fig. 2 This is a self-propelled combine.

Fig. 3 Field yield can be larger when you adjust and operate combines correctly.

Fig. 4 Cutting grain with a cradle was hard work.

In this unit we shall point out some of the things you should know about seed separation machines. Our discussion will be general. To learn the details of how to adjust and operate your machine, you should study your Operator's Manual. If you have trouble understanding how to adjust or operate the machine, ask your father, your leader, or implement dealer to help you.

Seeds must be separated from the stalks on which they grow. Sometimes these seeds are used for planting another crop, such as alfalfa or cabbage. In most cases the seeds, such as corn, wheat, rice, cotton, peanuts, beans, etc., are collected for food or for the oil that can be obtained from them.

The modern method of harvesting most of these seeds is with some type of "combine" harvester. The machine is called a combine because it does many jobs at one time. It combines jobs. When we use a combine the crop is allowed to ripen in the field. If the field is weedy the crop is often cut so that the weeds will dry; then the cut grain is picked up and put through the machine. Even though you try to harvest when the grain is dry and ripe, it is sometimes damp and needs to be dried in the bin before being stored to keep it from spoiling.

SAVE ALL YOUR SEED CROP

After the seeds are ripened, your next problem is to adjust and operate your machine efficiently so as to cut down harvesting losses. Yields of experimental plots are often much higher than the yield of the same seed in the field. The reason these plots show the highest yield is because all the seeds are saved. The grain is carefully harvested by hand; therefore, there are no losses. In the field we have losses but much field loss can be prevented by proper operation and adjustment of the machine.

MACHINES FOR SMALL GRAIN

Let us look at a combine for small grains. If you could see farmers of a century ago harvesting and threshing grain, you would know what takes place in a modern combine. For centuries, farmers have known that the grain must be held while being cut. We hold the grain upright with the guards on our modern machine. The farmer of long ago laid the grain in a pile so that he could bind it into a bundle. On our modern machines, the grain is pushed off the sickle with a reel. The reel forces the grain back to the draper canvas or to an auger as it is cut. The farmers who cut by hand had to collect the grain and bring it to a threshing floor. In our modern machine the auger or draper canvas carries the cut plants to the cylinder where threshing begins.

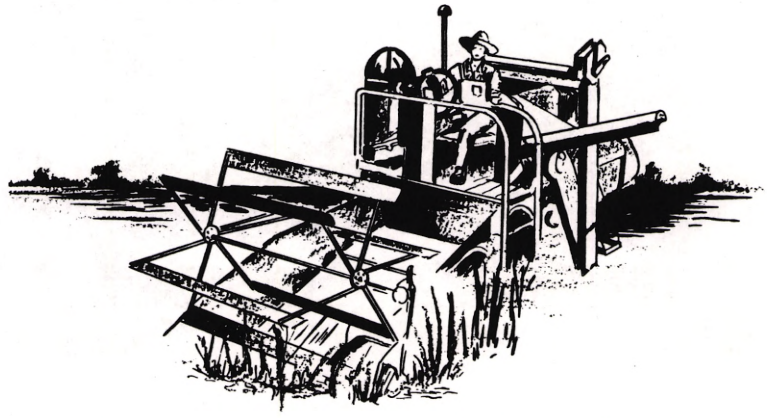

Fig. 5 The reel on a modern combine takes the grain off the sickle.

SEED SEPARATION

The farmer of the last century, after allowing the grain crop to dry in the sun and air, placed it on a threshing floor. Here he walked oxen on it or beat it with flails to thresh out the grain. Our modern machine does the same thing in a slightly different way. The ripened grain is carried to a cylinder where it is threshed.

The cylinder contains teeth or bars to give the grain a rubbing motion. Located below the cylinder is another set of teeth or bars; we call this part of the machine the concave. These work together like the fingers on your hands. The rotating cylinder strips the seed or rubs it from the straw as it is drawn over the fingers or bars on the concave. The cylinder works like the oxens' hooves in crushing the heads past each other and in crushing the straw to loosen the heads from the straw and from the chaff holding the kernels.

Next the straw passes the beater, which beats the heads of the grain as they come from the cylinder. This action keeps the grain from going around with the cylinder. In addition it helps further to loosen the grain in the head, so that it will fall out. Some combines have a number of beaters in different parts of the machine.

Next comes the straw rack. The farmer of many years ago used a pitchfork to lift the straw, shaking it to cause the grain to fall on the threshing floor. In our modern machines we use a rack which shakes up and down like a bucking horse to move the straw and to fluff it up so that the grain will shake through it, falling to a screen below it.

It used to be necessary to have a windy day for hand-threshing grain. As the straw and chaff were thrown into the air the lighter chaff and unfilled heads were blown away. In our modern machine we have a power-driven fan that furnishes the air for cleaning the grain. Nowadays it is not necessary to schedule such an operation only on a windy day. In the machine, the air is directed under screens so that all the light material is removed from the heavier grain. If more air is needed, the size of air intake opening is increased.

The screens allow the grain to fall through to the conveyor auger. The auger moves the grain to a bucket elevator, which dumps the grain into a bulk tank on the combine, ready to be hauled away by truck. In some combines the grain may be run into a sacking attachment and placed in sacks and tied.

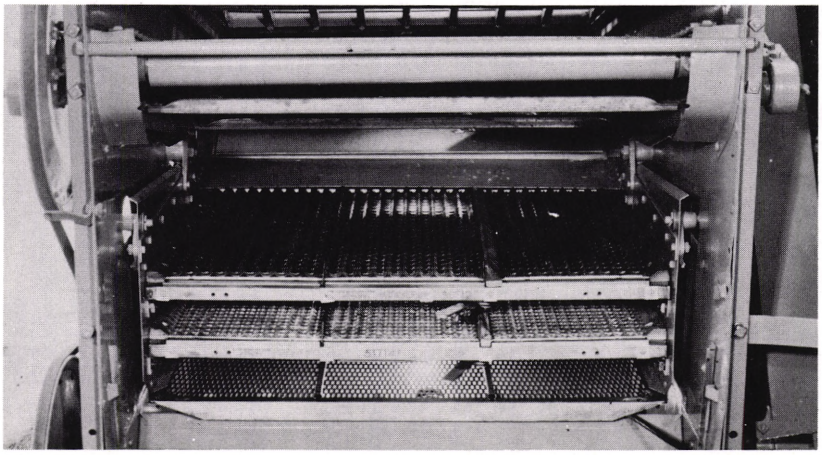

Fig. 10 This combine has three screens to separate grain from straw and chaff.

Fig. 6 Hand threshing was a slow, laborious process in the old days.

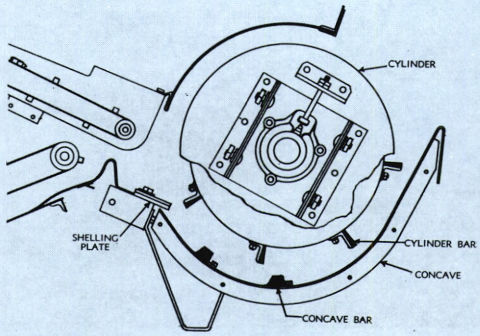

Fig. 7 Here's how the cylinder and concave look inside the combine.

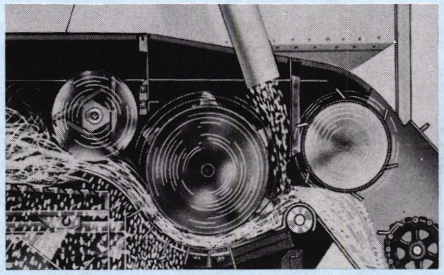

Fig. 8 Cut-away view of combine showing — left, rear beater; center, cylinder; right, feeder beater.

Fig. 9 Winnowing grain with a pitchfork — more hard work!

SEED SEPARATION

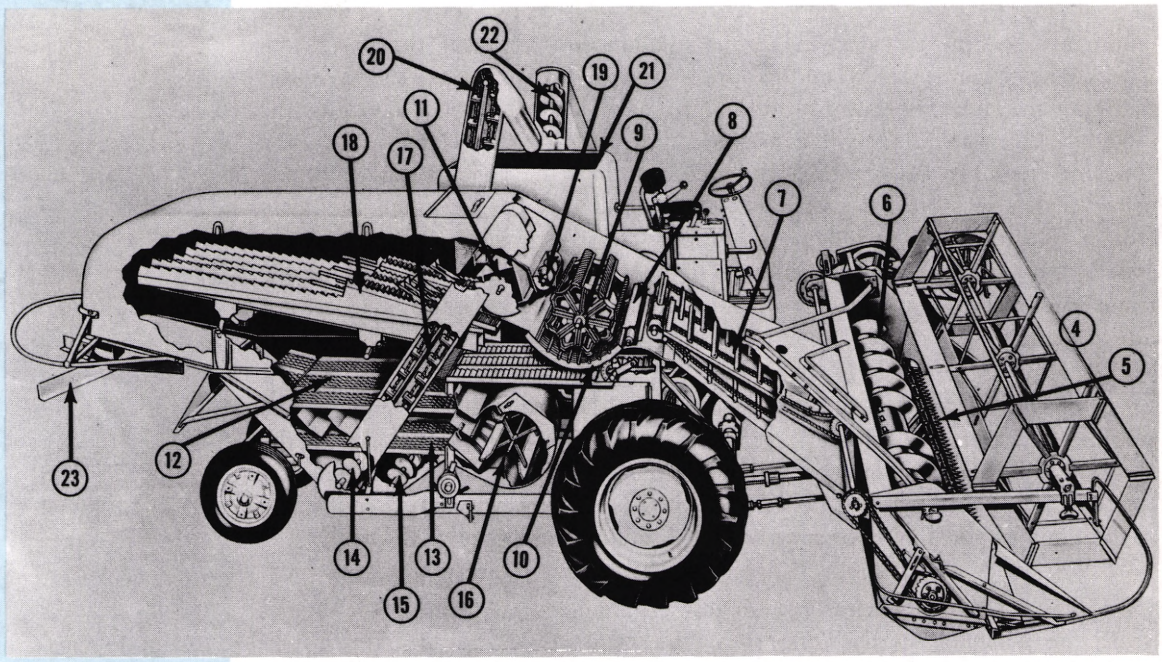

Fig. 11 Cross section of combine showing the most important parts.

4 Reel
5 Cutter bar
6 Table auger
7 Elevator to cylinder
8 Feeder beater
9 Cylinder
10 Concave
11 Rear beater
12 Chaff sieve
13 Lower sieve
14 Gleanings auger
15 Grain worm
16 Fan
17 Return elevator
18 Straw walker
19 Gleanings distributor worm
20 Grain elevator
21 Grain tank
22 Grain tank unloader worm
23 Straw spreader

It is easy to understand what takes place in the hand threshing of grain. Similarly you can understand how a combine operates like a hand thresher at work. Now, you need to examine one for yourself. Later you can see what takes place in other seed-separating and cleaning machines. Certain machines may not do the job expected of them. If you know what is needed, you can readily determine where adjustments are needed to make the combine work properly. To thresh the many different kinds of grain grown on a farm, it is necessary to have several machines; or one machine may be so equipped that the sieves can be changed, the space between the cylinder and concave can be changed, and other adjustments made.

PEANUT HARVESTERS

An example of a specialized machine is the combine used for the harvesting of peanuts. Peanuts, which grow underground, are lifted from the earth much like potatoes and are left to dry in the sun. The old method was to pick them off the stems by hand. If they are run through a machine such as a grain combine, the cylinder shatters some of the nuts from the pods. A special machine, a peanut picker, works more effectively. As the vines are dragged over a set of screens, the peanuts drop through and are pulled away from the stems. One of these machines, which can do the work of 25 hand pickers, is a time and labor saver.

Fig. 12 A peanut harvester in action.

SEED-SEPARATION PROBLEMS

Small grains, such as oats, wheat, barley, and rye, form in heads. Each individual kernel is protected by a chaffy covering or coat. Each kernel must be knocked from its protective cover and torn from the straw. Such crops require a vigorous threshing action.

The best way to tell how well a combine is working is by observing the straw as it comes through the combine. If there are unthreshed kernels in the straw or seed pods, the threshing action isn't vigorous enough.

SEED SEPARATION

There are several ways to make the cylinder do a better threshing job. Check the Operator's Manual to see if you are running the cylinder fast enough. However, one precaution to guard against is over-speeding the cylinder. Over-speeding will cause cracking of grain. You can reduce the space or clearance between the cylinder bars and the concave bar and you can even put in more concave bars if the cylinder is not knocking the grain from the head. If the cylinder concave bars are worn, they won't do a good job. Make sure also that the cylinder is parallel with the concave bars. On some machines the ends of the cylinder can be raised or lowered to permit adjustment.

A good demonstration is to show how to check the cylinder speed on a machine. Here is all you need to do: Determine how many times you need to turn the cylinder to make the reel go around once or to make the straw-walker complete one shake. When you have determined the reduction ratio between the cylinder and the slow-moving part, count the revolutions of the slow-moving part for 1 minute and then multiply by the reduction ratio. The result will give you the speed of the fast-moving part.

Crops such as clovers, alfalfa, and grasses are hard to thresh. They must really be whacked hard. Tests show that you could still get red clover seeds from the straw by re-threshing up to five times. The old clover huller had two threshing cylinders — one behind the other. When threshing seeds of this nature use high cylinder speeds and have the cylinder set close to the concave.

SOME SEEDS REQUIRE GENTLE HANDLING

Seeds such as soybeans can easily be damaged if the combine is not well adjusted. To thresh soybeans you need to cut down the cylinder speed to about one-half that used for small grains. You may also need to remove some of the concave bars. Consult your Operator's Manual to learn how this is done. In other words, what you are doing is reducing the threshing action and allowing more space for the seeds to get past the cylinder and concave so that they will not be cracked.

For lima and castor beans, a cylinder covered with rubber works against a concave or holding surface to rub the husks or pods off the beans. The rest of the cleaning takes place as it would in any other combine.

STRAW, CHAFF, AND DIRT SEPARATION

You don't need to wait for a windy day to clean your threshed grain if you own a combine. But you do need to be careful or you'll blow away some of the crop and lose it. Grain separation is just like separating gravel of varying sizes with a series of screens. The coarse screen is comparable to the straw rack — it removes the coarse material. The medium screen is like the chaffer — it removes the smaller material. The grain screen is much finer — it removes the hulls and separates the grain into more uniform parts.

In the combine, if all the seeds are not removed at the end of the sieve they are returned to the cylinder and threshed again. This action makes use of what is known as the return elevator. In general, when combining, as little material as possible should be returned for re-threshing. If too much material is returned it may result in extensive cracking of the grain.

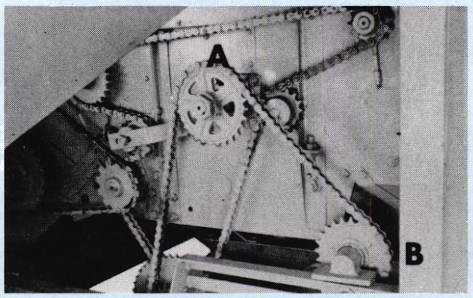

Fig. 13 To change cylinder speeds on this combine, change sprocket at "A" and adjust chain length at "B."

DEMONSTRATION!

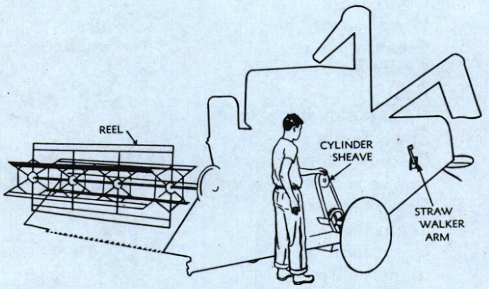

Fig. 14 Counting how many times the cylinder turns while the reel turns once or the straw walker makes one shake.

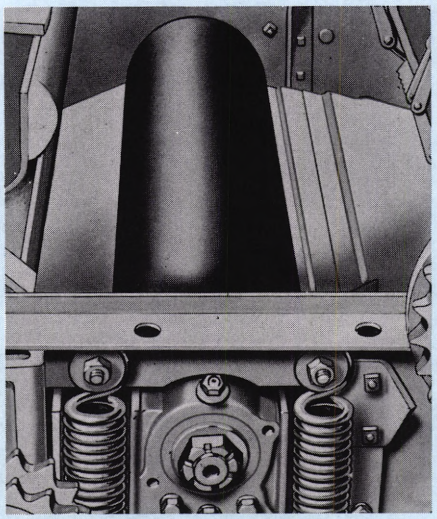

Fig. 15 Rubber roller for harvesting fragile seeds.

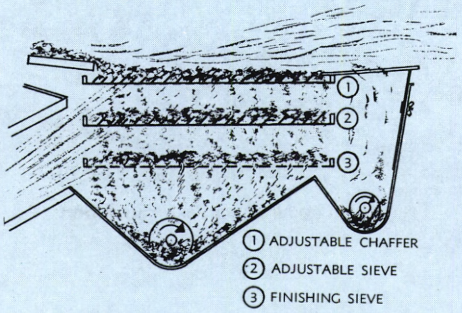

Fig. 16 Three sieves or screens are used on this combine.

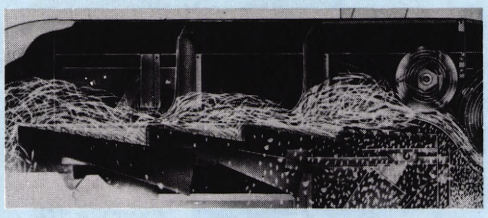

Fig. 17 Straw racks.

Fig. 18 Cylinder corn sheller.

Fig. 19 Corn picker.

Fig. 20 Corn combine picks the ears and shells the corn.

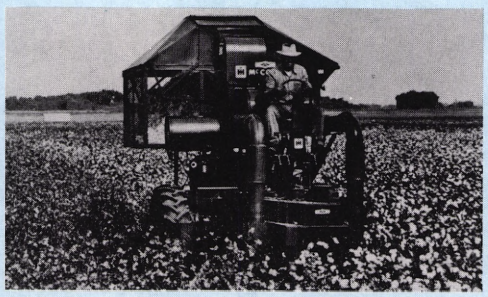

Fig. 21 A cotton picker does the work of 40 hand pickers.

The straw racks must be run at the right speed for proper shaking of the grain so that some of the grain will not ride over on top of the straw. Your Operator's Manual will tell you how fast the straw rack should be operated. In general, it should operate around 170 to 270 shakes per minute.

CORN SHELLERS

How does a corn sheller work? One type is called the cylinder sheller. Ears of corn enter at one end and kernels are rubbed off between the teeth on the cylinder and bars or holes in the concave. They fall through the concave. Cobs pass out the other end between the cylinder and the concave. Sieves and a fan are used to clean the broken pieces of cob, chaff, shucks, and silks from the corn. Chaff, silks, and shucks are blown into a pile. The corncobs are elevated into a separate pile.

CORN PICKER

The job of the corn picker is to strip the ears from the standing stalk of corn and leave the stalk in the field. This could be done with a pair of straight bars like two fingers. They could strip small ears from a corn plant, but they could do it better if each one revolved. That is just what the "picker rolls" or "snapping rolls" on a corn picker do. They have spiral ridges that bump the ears, first one way, then the other, as the machine moves forward. The ear soon gives up and is on its way up the rolls and into the machine.

The picker also has husking rolls. These are smoother than the picking rolls. The ears are too large to go through; but the rolls will catch the corn shucks and tear them from the ears. Husking rolls are made of metal, wood, or rubber. Mating rollers of unlike materials, such as rubber and metal, helps to give better grip on the husks. Moving along these rolls, the ears fall at the other end into an elevator for a trip to the trailer wagon.

Sometimes the ears are put through a sheller, like the one we described earlier, before they leave the machine. We call this machine a corn combine or picker sheller. There are other kinds of corn shellers. It will be helpful to you if you will find one and see how it works.

COTTON HARVESTERS ARE BIG LABOR SAVERS

The cotton picker is also a labor-saving machine and it increases cotton production. A mechanical picker can do the work of 40 hand pickers. Again, the way it works is simple. You can demonstrate it to your club by placing a roughened rod in an electric hand-drill. Wet the rod if you want it to work better because cotton clings to it more readily if the rod is wet. The revolving rod or "spindle" picks up the cotton and winds it up much as you would wind a piece of string. The spindle then moves back into the machine on its carrier and a "doffer" strips the cotton from the spindle, in about the same way you would remove cotton from the roughened rod with your fingers. The cotton is then blown up into the basket on the machine. The spindle next passes through a "wiper" where it is cleaned and wetted for picking more cotton. Another type of cotton harvester is the stripper, which removes both burr and lint.

COTTON GINS

Cotton fibers, called lint, grow on cottonseed. These fibers must be separated from the seeds before either can be used in the manufacture of the many products that are made from these raw materials. The process of separating

SEED SEPARATION

cottonseeds from fibers is called ginning. Before the invention of the cotton gin it took many man-hours to do this job of seed and fiber separating by hand. It is said that Eli Whitney got his idea for the cotton gin from watching a cat claw feathers from a hen through the bars of a coop. When cotton is harvested it often contains much trash and moisture that must be removed before ginning. The trash is removed by passing the seed cotton through one or more cleaners. The excess moisture is removed by driers. Seeds with cotton fibers hanging to them move alongside bars or "ribs" through which seeds cannot pass. Saws with many small teeth extend through the ribs and pull the fibers from the seeds. The cotton fibers are then blown or brushed off the teeth. The cotton fiber is now ready for additional cleaning (if needed) and baling. When all usable fibers have been removed, the seeds drop between the saws and fall onto a conveyor which carries them to a storage bin.

COTTON HANDLING

Air moves cotton most of the way from the trailer through the gin and to the bale. Because cotton is light and bulky it moves easily with air. It is also easy to separate from the air stream by mesh screens through which the air can penetrate, leaving the cotton behind. Cotton goes through a number of cleaners.

So from combines to cotton pickers, simple methods are used in machines that seem almost magical. You can find out how any of them work. The thresher is a mechanical flail. The corn picker is a two-bar stripper. The cotton picker is a rolling rattail file. The cotton gin is a cat's paw, clawing cotton instead of feathers. What you don't see the first time, you will understand when you look again. Keep trying. Power farming makes it possible for you to have the time to study labor- and time-saving methods.

CHECK FIELD LOSSES

By checking field losses and adjusting your harvesting machines you can learn how to get more grain into the grain tank—where it belongs. Here's how to check field losses behind combines and corn pickers.

Combines: You can check field losses behind a combine by counting the seeds left on the ground. Make a wooden frame 1 foot on each side. Place the frame on the ground immediately behind the combine. Count all of the seeds you find inside the frame. Repeat the process several times until you are certain that you have enough counts for a good average. Vary the location across the width of cut of the combine so that you will average the shatter loss from the sickle and the losses that come from the rack and cleaning shoe. Use the table in Fig. 24 to determine your loss in bushels per acre. With a little time and patience you can learn how to adjust your combine to get the least amount of grain left on the ground.

Corn-harvesting equipment: Most cornfields are planted in 40-inch rows. Measure off a square 40 inches on a side around the corn hill, or 40 inches of row in drilled or listed corn. Count the number of kernels in the square. Twenty kernels per 40" square equals 1 bushel per acre of shelled corn loss. If you found 60 kernels inside the frame the loss would be 3 bushels per acre. To get the ear corn loss, figure each good-sized ear you find in 133 feet of row as 1 bushel per acre loss. Add shelled loss and ear loss for total loss. Maybe your club could check on the field losses of several of your neighbors. They would be glad to find out how their machines are working.

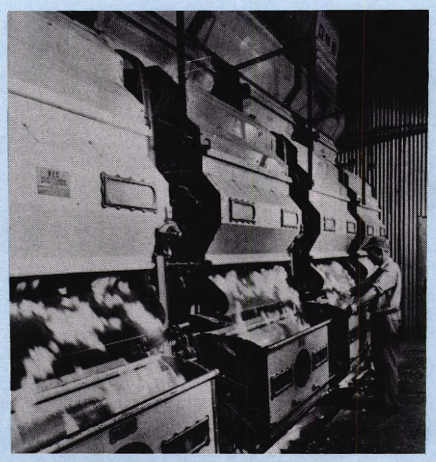

Fig. 22 A cotton gin separates cotton fiber from seed and trash.

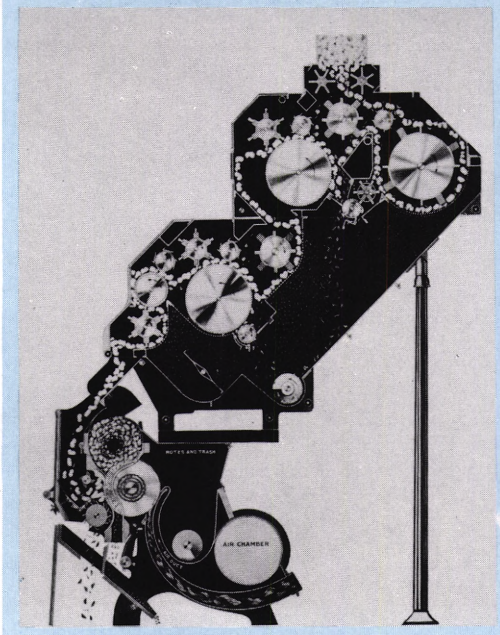

Fig. 23 "X-ray picture" of the cotton gin.

CROP	Number of seeds per sq. ft. to equal a loss of one bushel per acre
WHEAT	18-20
OATS	10-12
SOYBEANS	4-5
RYE	21-24
BARLEY	13-15

Fig. 24 Use this table to check combine losses.

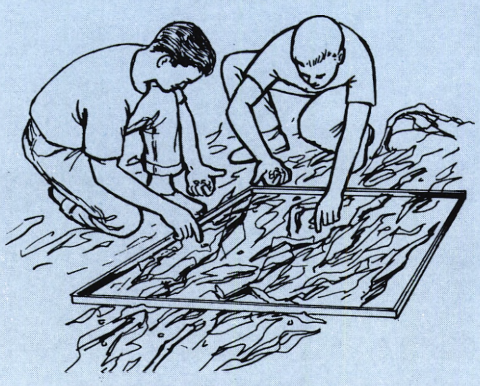

Fig. 25 Checking corn losses.

WORK UNIT
Fourth Book Unit 7

SEED SEPARATION

Select a harvesting machine for this work unit. Use your Operator's Manual to help you learn how to service the machine and adjust it properly. If possible, spend some time checking field losses. Maybe you can even find a way to adjust the machine to reduce losses.

To make it easier for you to study your machine, divide it into sections according to the jobs performed. For each section, describe the adjustments that can be made, maintenance needed, and then add some safety pointers. Any time that you find a speed that is important, add it to the list and indicate the proper speed at which the part should run.

Machine selected _____

1. Cutting; stripping; snapping; gathering.

   a. Adjustments _____

   _____

   b. Maintenance _____

   _____

   c. Safety pointers _____

   _____

2. Feeding; elevating.

   a. Adjustments _____

   _____

   b. Maintenance _____

   _____

   c. Safety pointers _____

   _____

3. Separation; threshing.

   a. Adjustments _____

   _____

   b. Maintenance _____

   _____

   c. Safety pointers _____

   _____

(Over)

4. Cleaning.

a. Adjustments _____

_____

b. Maintenance _____

_____

c. Safety pointers _____

_____

5. Conveying to wagon, truck, or hopper.

a. Adjustments _____

_____

b. Maintenance _____

_____

c. Safety pointers _____

_____

6. Others

a. Adjustments _____

_____

b. Maintenance _____

_____

c. Safety pointers _____

_____

7. Check field losses. Tell how you checked the losses, how much they were, and whether you were able to adjust the machine to reduce the losses. _____

_____

_____

_____

_____

_____

Note: Fill out this work unit, using your own machinery at home. Be ready to discuss your experiences with other 4-H members at your next club meeting.

MEMBERS' CHECK-UP

FOURTH BOOK UNIT 7 — SEED SEPARATION

Place the letter for the correct answer at the right of the page.

1. Seeds are usually collected: (A—so we can have the straw) (B—for seed, food, and other uses) (C—to get the crop out of the field). _____

2. An important feature to watch when using a combine is: (A—to make sure the machine is operated at a high speed) (B—to make sure the grain is ripe and dry enough for storage) (C—to make sure the beater turns in the opposite direction from the cylinder). _____

3. In a combine the cylinder: (A—cuts the standing grain) (B—separates the grain from the chaff) (C—strips or rubs the grain out of the head). _____

4. On a combine the beater is located: (A—in front of the cylinder) (B—under the straw rack) (C—just back of and above the cylinder). _____

5. The fan on a combine is used to: (A—remove green weeds) (B—cool the cylinder) (C—furnish air for cleaning the grain). _____

6. When threshing large grains such as beans, the cylinder speed is: (A—usually slowed down) (B—increased) (C—left the same as for small seeds). _____

7. A cotton picker uses: (A—knives) (B—sections) (C—spindles) to gather the cotton from the boll. _____

8. In a corn picker the husks are removed by: (A—the snapping rolls) (B—the husking rolls) (C—a strong air blast). _____

9. Grain scattered evenly over the field indicates: (A—the cylinder is losing grain) (B—too much air on the separating sieves) (C—the grain is shattering in the field). _____

10. If the reduction ratio between cylinder and reel is 30 to 1, how fast will the cylinder turn when the reel makes 35 revolutions per minute: (A—900 rpm) (B—1,200 rpm) (C—1,050 rpm). _____

Note: This Check-Up Sheet is intended to test what you have learned and to stimulate discussion with the other members. The more you discuss these questions with your leader and the other members the more you learn.

FARM MACHINERY MANAGEMENT

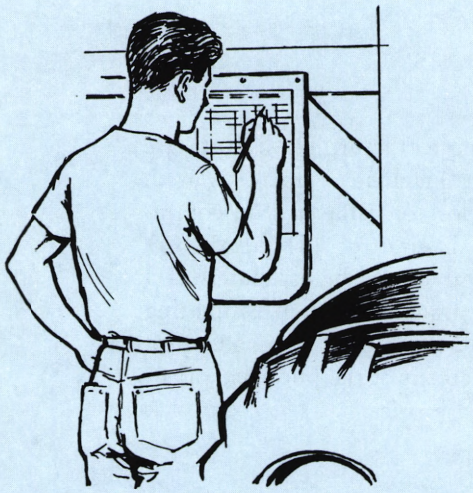

Fig. 1 Continue keeping tractor service and cost records.

Farm machinery costs represent a large portion of the total expenses on your farm, and as such are quite important from the standpoint of management. Machinery costs often account for 25 to 40 percent of the total annual expenses. On some farms they are the largest single expense item except for interest on the investment in the land.

In this unit you will learn how to determine costs for some of the machinery on your farm. You will also study some of the important factors related to the ownership of farm machinery. But first, it is important that you continue with the service and cost records for your tractor. The first three pages of the work unit are provided for that purpose.

MEANING OF MACHINERY MANAGEMENT

As you take on the job of running a farm you will have to make several decisions regarding the ownership and use of machinery to run your farm. You will have to select suitable types and sizes to match the needs of your farm. You may make decisions as to the economy of owning a machine compared with having a custom operator do the work.

Once you have purchased a machine it's up to you to take care of it and use it properly. We hope your experience with the 4-H Tractor Program Project will be of benefit to you. The more you can cut operating and repair expenses the greater will be your profits. You can't have any "loafers" on your farm. Each machine must pay it s own way.

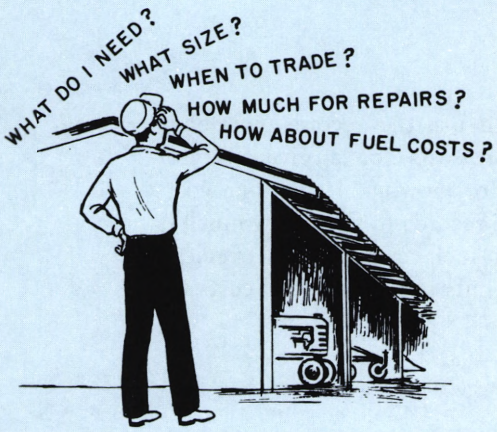

Fig. 2 Making the proper decisions will increase profits.

MACHINE CAPACITY

In selecting equipment and planning field work it is sometimes desirable to know the capacity—or rate of performance—of a given machine. In the use of any machine there is a certain amount of lost time in idle travel, in turning at the ends, and in adjusting, lubricating, and servicing. The percent of time lost by each machine varies considerably, but you can make a quick estimate with the following formula (a time loss if 17.5 percent is assumed):

$$\text{Acres per hour} = \frac{\text{machine width in feet X speed in miles per hour}}{10}$$

Example: If you cut hay with a 7-foot mower traveling 4 miles per hour the capacity would be $\frac{7 \text{ X } 4}{10}$ or 2.8 acres per hour.

The following table shows capacities of various sizes of machines, as determined by this formula: Capacity, acres per hour $= \frac{\text{width X speed.}}{10}$

MACHINE CAPACITY, ACRES PER HOUR, FOR VARIOUS WIDTHS AND GROUND SPEEDS

Machine speed in miles per hour

Machine widths	2	2½	3	3½	4	4½	5	6	8	10
2 ft.	.40	.50	.60	.70	.80	.90	1.00	1.20	1.60	2.00
3 ft.	.60	.75	.90	1.05	1.20	1.35	1.50	1.80	2.40	3.00
4 ft.	.80	1.00	1.20	1.40	1.60	1.80	2.00	2.40	3.20	4.00
5 ft.	1.00	1.25	1.50	1.75	2.00	2.25	2.50	3.00	4.00	5.00
6 ft.	1.20	1.50	1.80	2.10	2.40	2.70	3.00	3.60	4.80	6.00
7 ft.	1.40	1.75	2.10	2.45	2.80	3.15	3.50	4.20	5.60	7.00
8 ft.	1.60	2.00	2.40	2.80	3.20	3.60	4.00	4.80	6.40	8.00
9 ft.	1.80	2.25	2.70	3.15	3.60	4.05	4.50	5.40	7.20	9.00
10 ft.	2.00	2.50	3.00	3.50	4.00	4.50	5.00	6.00	8.00	10.00
12 ft.	2.40	3.00	3.60	4.20	4.80	5.40	6.00	7.20	9.60	12.00
14 ft.	2.80	3.50	4.20	4.90	5.60	6.30	7.00	8.40	11.20	14.00
16 ft	3.20	4.00	4.80	5.60	6.40	7.20	8.00	9.60	12.80	16.00
18 ft.	3.60	4.50	5.40	6.30	7.20	8.10	9.00	10.80	14.40	18.00
20 ft.	4.00	5.00	6.00	7.00	8.00	9.00	10.00	12.00	16.00	20.00

MACHINE CAPACITY, ACRES PER HOUR =

$$\frac{\text{MACHINE WIDTH (feet) X SPEED (MPH)}}{10}$$

Example: 7 ft. mower at 4 mph

$$\frac{7 \times 4}{10} = \frac{28}{10} = 2.8 \text{ ACRES PER HR.}$$

FARM MACHINERY MANAGEMENT

FIXED COSTS

In the Third Year Tractor Project you learned how to determine the costs of owning a tractor. These costs are sometimes called fixed costs because they are affected very little by the amount a machine or tractor is used. To refresh your memory we will review these costs briefly: (1) Depreciation or loss of value as you continue to own a machine; (2) interest on money invested in a machine; (3) insurance; (4) taxes; (5) housing costs. These costs will vary from one year to the next but their average values can be estimated as a given percent of the purchase price. The following average annual values are commonly used in estimating fixed costs for a tractor or machine: (1) Depreciation—6 to 9 percent of the purchase price, depending on its useful life; (2) interest—3 percent of the purchase price; (3) insurance—0.25 percent of the purchase price; (4) taxes—1 percent of the purchase price; (5) housing—1 percent of the purchase price.

REPAIR COSTS

When the amount of annual use of a tractor or machine is known, repair costs are often included along with fixed costs and figured on the basis of the purchase price of the machine. Such is the case with the figures shown on page 3. A little later on we will show you how to use the table on page 3.

Repair costs will vary with the amount of time a machine is used. Notice that the table on page 3 contains a column showing repair costs for a machine as a certain percent of the purchase price. The table shows, for example, that 30 percent of the purchase price of a disk harrow will be spent for repairs during its life of 15 years. That's an average of 2 percent a year. If the disk cost $1,000 when new, then a total of $300 would be spent for repairs during its useful life of 15 years. As an average, 2 percent of $1,000, or $20, would be spent each year.

OPERATING COSTS

Of all of the various costs, operating costs are the easiest to determine. You can use the records you have been keeping as part of the 4-H Tractor Project to help you estimate operating costs for a given tractor or machine. Suppose you found that it takes 3 gallons of gasoline per hour for plowing. If gasoline costs 20 cents per gallon that would be a total of 60 cents per hour. You may even have records to show how much is spent for oil and grease. If not, you can estimate these costs as 15 percent of fuel costs. In the previous example the oil and grease costs would be about 15 percent of 60 cents or 9 cents per hour. Total costs for fuel, oil, and grease would then be 69 cents per hour.

ESTIMATING COSTS

The table on page 3 can be used to estimate costs for various machines, including depreciation, interest, insurance, taxes, housing, and repairs. Notice that the table gives the cost per hour of use for each $100 new cost. In order to show you how to use this table let's work some sample problems.

(1) What is the cost per hour of use for a tractor that was purchased new for $4,000 and is used 500 hours a year? On the line for a tractor and under the column showing an annual use of 500 hours a year we find a cost of $.32 per hour for each $100 new cost.

$$\frac{\$4{,}000}{100} = 40 \times \$.32 \text{ or } \$1.28 \text{ an hour}$$

Note: This does not include fuel, oil, and grease costs.

(2) What is the cost per hour for a $10,000 combine that is used 200 hours a year? There is no 200-hour column on the table so we will have to do a little estimating. Under the 150-hour column we find a value of $.117 and under the 250-hour column we find a value of $.088. In order to use 200 hours (that's half way between 150 and 250) let's use $.102, which is about half way between $.088 and $.117.

$$\frac{\$10{,}000}{100} = 100 \times \$.102 \text{ or } \$10.20 \text{ an hour}$$

If the combine could cut 3 acres an hour, that would be a cost of $3.40 an acre, not counting fuel, oil, and grease. The charge for fuel, oil, and grease can be easily estimated from your own records.

COST OF USE OF CROP MACHINES

The following table may be used for estimating costs for owning and using a machine or tractor.

Cost per hour of use per $100 new cost includes depreciation, interest, insurance, taxes, housing, and repairs. The figures do not include cost of labor, fuel, oil, grease, wire, twine, or other such operating costs.

*COST PER HOUR OF USING FARM MACHINES
(Per $100 of new cost)

Machine	Years until obsolete	Hours to wear out	Total repair cost in percent of new cost	Cost per hour of use per $100 of new cost: 20 hr. per yr.	40 hr. per yr.	60 hr. per yr.	100 hr. per yr.	150 hr. per yr.	250 hr. per yr.	350 hr. per yr.
Tractor plow	15	2000	80	$.600	$.319	$.226	$.152	$.120	$.108	$.103
Tractor disk harrow	15	2000	30	.575	.295	.202	.127	.095	.083	.078
Spring-tooth harrow	20	2000	40	.495	.253	.179	.115	.100	.088	.083
Spike-tooth harrow	20	2500	30	.487	.250	.171	.107	.082	.070	.065
Roller	25	1500	10	.432	.220	.149	.118	.103	.091	.086
Soil pulverizer	20	2000	15	.483	.245	.167	.103	.088	.076	.071
Endgate seeder	20	800	30	.512	.275	.238	.208	.193	.181	.176
Grain drill	20	1200	25	.496	.258	.179	.149	.135	.122	.117
Corn planter	20	1200	30	.500	.263	.184	.153	.138	.126	.121
Field sprayer	10	1500	30	.745	.383	.262	.165	.117	.105	.100
Rotary hoe	15	1500	20	.573	.293	.200	.125	.110	.098	.093
Tractor cultivator	12	2500	40	.662	.341	.234	.148	.106	.078	.073
Rotary cutter	12	2000	35	.659	.338	.232	.146	.104	.086	.081
Tractor mower	12	2000	75	.679	.358	.252	.166	.124	.106	.101
Dump rake	10	1500	25	.742	.379	.259	.162	.114	.102	.097
Side-delivery rake	15	1500	50	.591	.312	.219	.145	.130	.118	.113
Tractor buck rake	12	1500	25	.657	.337	.231	.145	.114	.102	.097
Hay loader	10	1200	25	.746	.383	.263	.166	.134	.122	.117
Forage harvester	12	2000	60	.671	.350	.244	.158	.116	.098	.093
Forage blower	12	2500	25	.651	.330	.224	.138	.096	.068	.063
Pickup baler (auto tie)	12	2500	40	.657	.336	.230	.144	.102	.074	.069
Swather	12	1200	25	.662	.341	.235	.149	.134	.122	.117
Combine	10	2000	40	.745	.383	.262	.165	.117	.088	.083
Corn binder	10	1000	40	.765	.402	.282	.185	.170	.168	.153
Stationary silage cutter	10	1200	30	.750	.387	.267	.170	.138	.126	.121
Husker-shredder	10	2500	25	.735	.372	.252	.155	.107	.068	.063
Corn picker	10	1500	30	.745	.383	.262	.165	.117	.105	.091
Spindle cotton picker	10	2000	55	.753	.390	.270	.173	.125	.096	.091
Manure loader	10	2000	25	.738	.375	.255	.158	.110	.086	.076
Manure spreader	15	2500	25	.568	.289	.195	.122	.084	.068	.063
Feed grinder	15	2000	25	.571	.292	.198	.125	.093	.081	.076
Portable elevator	15	1500	15	.568	.289	.195	.122	.107	.095	.090
				60 hr per yr	150 hr per yr	300 hr per yr	500 hr per yr	750 hr per yr	1000 hr per yr	1500 hr per yr
Wagon gear and box	15	5000	50	.196	.084	.047	.039	.036	.035	.033
Tractor	15	12000	120	.196	.084	.047	.032	.025	.023	.021

*From American Society of Agricultural Engineer's Handbook.

FARM MACHINERY MANAGEMENT

On the last page of the work unit you will find a form for estimating costs for one tractor and one machine that is used on your farm. You will need to use some of the records you have been keeping to help you determine these costs. You will also need to use some of the information we have given on pages 2 and 3 of this unit. It will be easier for you to complete the cost estimates in the work unit if you will first try your hand at the following problems.

Problem 1. How many acres an hour could you plow, if the plow cuts a 42-inch width at 4 miles an hour?

Problem 2. How many acres an hour would a 10-foot combine harvest at 3 miles an hour?

Problem 3. How fast would you have to travel to mow 3 acres an hour with a mower cutting a 6-foot swath?

Problem 4. What is the cost per hour for a $3,000 tractor that is used 750 hours per year? (Do not figure fuel, oil, and grease costs).

Problem 5. What is the cost per hour for a $700 field sprayer that is used 100 hours per year?

Problem 6. What is the cost per hour for a tractor plow costing $600 that is used 80 hours a year?

WORK UNIT
Fourth Book Unit 8

FARM MACHINERY MANAGEMENT

RECORD of HOURS and TYPES of SERVICES PERFORMED

A Hrs.

B Hrs.

C Hrs.

D Hrs.

E Hrs.

F Hrs.

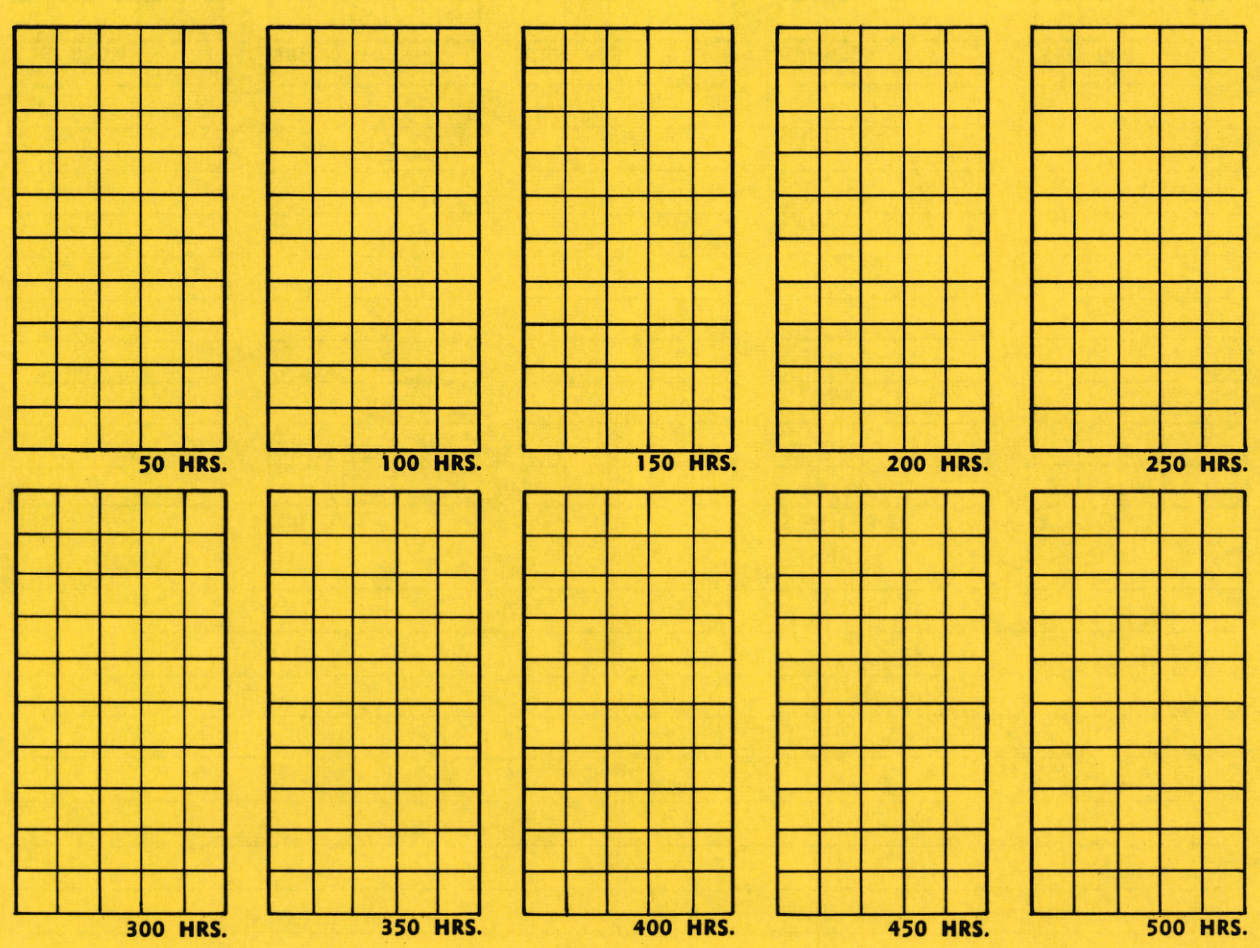

550 HRS.

600 HRS.

650 HRS.

700 HRS.

750 HRS.

800 HRS.

850 HRS.

900 HRS.

950 HRS.

1,000 HRS.

1,050 HRS.

1,100 HRS.

1,150 HRS.

1,200 HRS.

1,250 HRS.

RECORD of FUEL, OIL, and REPAIRS

DATE	TYPE of WORK	FUEL USED			OIL USED	HOURS	NOTES on other LUBRICATION COSTS, REPAIRS, etc.
		GAUGE AT START	GAUGE AT STOP	GALLONS USED	QUARTS		

Use the records you have been keeping, and the information given earlier in the white pages of this unit to estimate the cost for some of the equipment on your farm. We are asking that you use the blanks below for one tractor and one machine for which you have accurate records for at least one month's use. If you want to figure costs for other machines or tractors, submit those on a separate sheet.

1. Tractor: Make _____ Model _____ New cost _____.

Number of hours used each year _____ hours

a) Cost per hour for each $100 new cost: (from table on page 3) _____

b) Cost per hour for tractor: (new cost) $\frac{\_\_\_\_\_}{100}$ X _____ (factor from table on page 3)

Answer: _____ cost per hour

c) What is the estimated cost for depreciation, interest, insurance, taxes, housing, and repairs for your tractor for each year.

Cost per hour (from b) _____ X _____ hours of use each year

Total cost per year _____

d) What is your estimate of the fuel, oil, and grease cost for your tractor for the year?

Fuel _____ Oil and Grease _____ Total _____

e) What is the average cost per hour for your tractor? Add the cost for depreciation, interest, etc. from (c) to the fuel, oil, and grease cost from (d) and divide by the number of hours the tractor is used each year.

Answer _____ an hour

2. Machine: _____ Make _____ Model _____ Size _____ New cost _____

a) What is the capacity of the machine in acres per hour? _____ acres per hour

b) Number of hours machine is used each year? _____ hours of use each year

c) Cost per hour per $100 new cost. (from page 3) _____

d) Total cost per hour for machine: (new cost) $\frac{\_\_\_\_\_}{100}$ X (c) _____

Answer: _____ cost per hour

e) What is the total annual cost for depreciation, interest, insurance, taxes, housing, and repairs for the machine for each year?

(hours of use per year) _____ X (cost per hour) _____

Answer: _____ per year

f) What is the average cost per acre? _____

Note: Fill out this work unit, using your own machinery at home. Be ready to discuss your experiences with other 4-H members at your next club meeting.

FOURTH YEAR

MY ACHIEVEMENTS AND EXPERIENCES IN THE 4-H TRACTOR CARE AND SAFETY PROJECT

WHAT TO WRITE

In telling the story of your work in the 4-H Tractor Care and Safety Project you might give the reasons you decided to enroll in the club, the number of meetings you attended, and the demonstrations you gave. If you were an officer of the club describe your duties and how you carried them out. Mention any special awards or recognition you received for your work. How many hours did you spend on maintenance work during the club year? Tell about people who assisted you or people to whom you gave assistance. What part of the program was the most interesting to you?

(continued on next page)

ADDITIONAL NOTES

NOTES
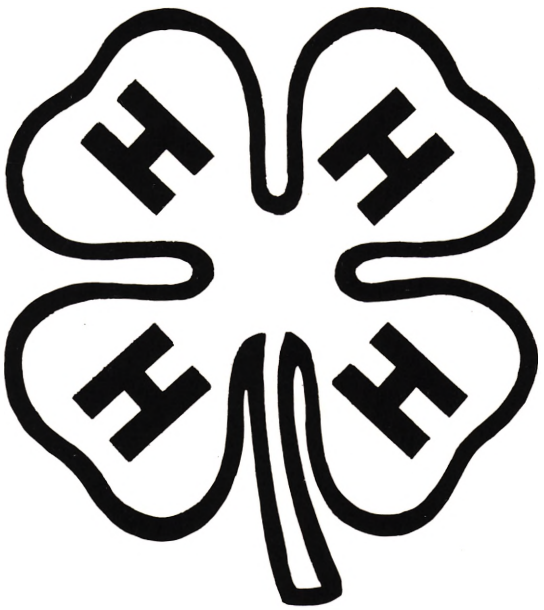
LITHO IN U.S.A.